# MINNESOTA DEPARTMENT OF TRANSPORTATION
## CITY OF BLOOMINGTON
## SOUTH LOOP LOCAL ROAD WAYFINDING PROJECT (CITY PROJ. # 2013-201)

CONSTRUCTION PLAN FOR: SIGNING AND SIGNAL SYSTEM REVISIONS

LOCATED ON: AMERICAN BLVD, LINDAU LN, KILLEBREW DR, E OLD SHAKOPEE RD, IKEA WAY, 20TH AVE, 22ND AVE, 24TH AVE, 28TH AVE, 30TH AVE AND 82ND ST

### LEGEND

| | EXISTING | PROPOSED |
|---|---|---|
| CENTER LINE | | |
| RIGHT OF WAY LINE | | |
| PROPERTY LINE | | |
| PERM. EASEMENT LINE | | |
| TEMP. EASEMENT LINE | | |
| EDGE OF ASPHALT | EOA | |
| CURB & GUTTER LINE | | |
| REMOVE CURB AND GUTTER | | |
| REM AND REPLACE C & G | | |
| SEWER LINE | | |
| SEWER SERVICE LINE | S | S |
| STORM SEWER | | |
| WATER LINE | | |
| WATER SERVICE LINE | W | W |
| WATER SRVC. LINE (ABAN.) | W(A) | W(A) |
| CATV LINE | CATV | CATV |
| GAS LINE | G | G |
| OVERHEAD ELECTRIC | OE | OE |
| FIBER OPTIC | FO | FO |
| UNDERGROUND ELECTRIC | UE | UE |
| TELEPHONE CABLE | T | T |
| UTILITY POLE | | |
| LIGHT POLE | | |
| UTILITY POLE W/ LIGHT | | |
| GUY WIRE | | |
| MANHOLE; STORM, SAN. | | |
| CATCH BASIN | | |
| HYDRANT | | |
| WATER VALVE | | |
| WATER VALVE IN MANHOLE | | |
| RAILROAD | | |
| CONIFEROUS TREE | | |
| DECIDUOUS TREE | | |
| CLEAR AND GRUB TREE | | |
| HEDGE | | |
| PED. CURB RAMP | | |
| TRAFFIC SIGNAL | | |
| BLOCK RETAINING WALL | | |
| WOOD RETAINING WALL | | |
| TREE LINE | | |
| CHAIN LINK FENCE | | |
| WOOD FENCE | | |
| WIRE FENCE | | |
| EROSION CONTROL FENCE | | |
| INLET PROTECTION | | |
| SANITARY MANHOLE | | A |
| STORM MANHOLE | | MH X |
| CONCRETE WALK | | |
| REMOVE CONCRETE WALK | | |
| BITUMINOUS SURFACE | | |
| REM. BITUMINOUS SURF. | | |
| CONCRETE WALK SPECIAL | | |
| GRAVEL SURFACE | | |
| MILL BITUMINOUS SURFACE | | |
| BUILDING | | |
| SUBGRADE EXCAVATION | | |

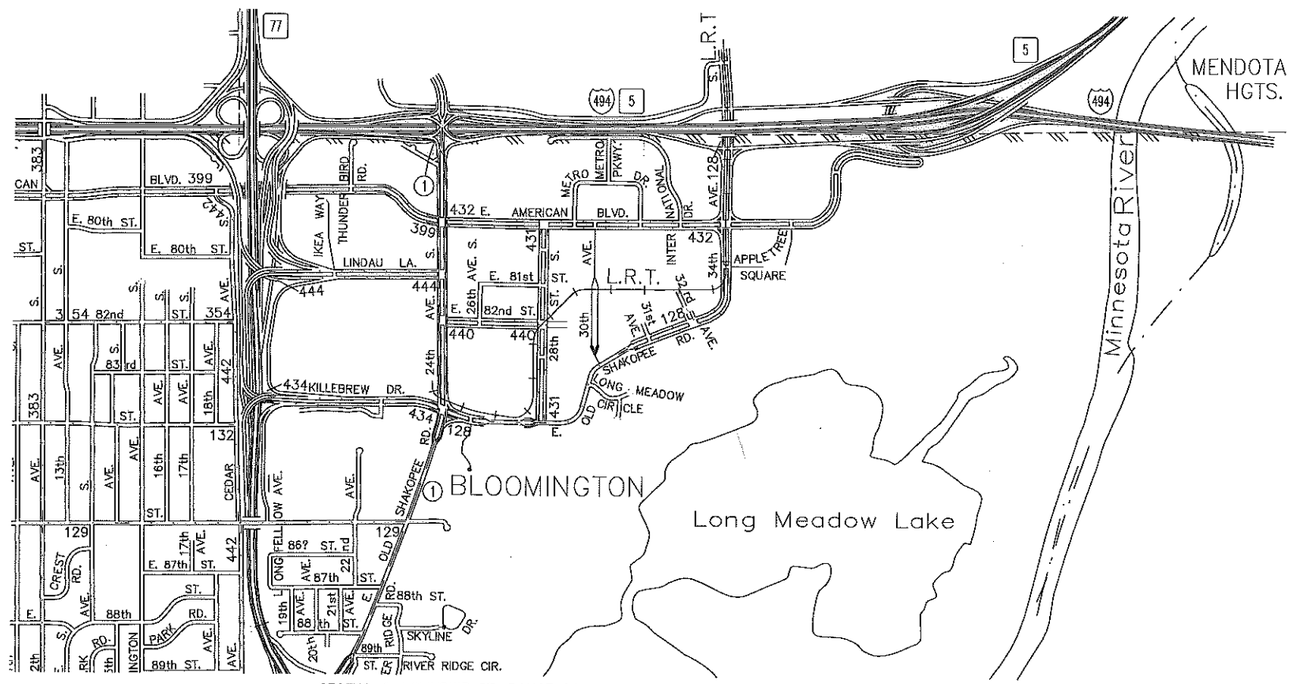


SECTION 1, TOWNSHIP 27, RANGE 24

| PLAN REVISIONS | | |
|---|---|---|
| DATE | SHEET NO. | APPROVED BY |
| | | |
| | | |
| | | |
| | | |

THE SUBSURFACE UTILITY INFORMATION IN THIS PLAN IS UTILITY QUALITY LEVEL D. THIS UTILITY QUALITY LEVEL WAS DETERMINED ACCORDING TO THE GUIDELINES OF CI/ASCE 38-02, ENTITLED "STANDARD GUDELINES FOR THE COLLECTION AND DEPICTION OF EXISTING SUBSURFACE UTILITY DATA".

SCALES (IN FEET)

INDEX MAP 1"=2000' (0 – 2000)

PLAN 1"=40' (0 – 40)

SIGNING PLAN 1"=60' (0 – 60)

PROJECT LOCATION
COUNTY: HENNEPIN
DIVISION: METRO

### DESIGN DESIGNATION

| | AMERICAN BLVD E (TH 77 TO NATIONAL WILDLIFE REFUGE) MSAS 399/432 | LINDAU LN (TH 77 TO 30TH AVE S) MSAS 444 | E 82ND ST (24TH AVE S TO 28TH AVE S) MSAS 440 | KILLEBREW DR (TH 77 TO E OLD SHAKOPEE RD) MSAS 434 | IKEA WAY/ THUNDERBIRD RD LINDAU LN TO AMERICAN BLVD E) | 24TH AVE S (KILLEBREW DR TO I-494) CSAH 1 | E OLD SHAKOPEE RD (APPROX 1500 FT SOUTH OF KILLEBREW DR TO 34TH AVE S) CSAH 1/MSAS 128 | 28TH AVE S (E OLD SHAKOPEE RD TO AMERICAN BLVD E) MSAS 431 | 34TH AVE S (E OLD SHAKOPEE RD TO I-494) MSAS 128 |
|---|---|---|---|---|---|---|---|---|---|
| FUNCTIONAL CLASS | A MINOR RELIEVER | MAJOR COLLECTOR | MAJOR COLLECTOR | MAJOR COLLECTOR | PRIVATE/LOCAL | A MINOR RELIEVER/ MINOR EXPANDER | A MINOR EXPANDER/ MAJOR COLLECTOR | MAJOR COLLECTOR | A MINOR RELIEVER/ MAJOR COLLECTOR |
| NO. OF PARKING LANES | 0 | 0 | 0 | 0 | 0 | 0 | 0 | 0 | 0 |
| ADT (YEAR) | 10,400 (2012) | 20,050 (2010) | 2,600 (2012) | 18,000 (2012) | N/A | 21,200 (2012) | 8,900 (2012) | 2,400 (2012) | 15,200 (2012) |
| ADT (2030) | 24,000 | 34,500 | 8,450 | 39,000 | N/A | 65,000 | 30,000 | 10,000 | 51,000 |
| DESIGN SPEED | 35 MPH | 35 MPH | 35 MPH | 35 MPH | 35 MPH | 40 MPH | 35 MPH | 35 MPH | 40 MPH |

MINN. PROJ. NO. CMAQ 2714 (080)

### GOVERNING SPECIFICATIONS

THE 2005 EDITION OF THE MINNESOTA DEPARTMENT OF TRANSPORTATION "STANDARD SPECIFICATIONS FOR CONSTRUCTION" SHALL GOVERN.

### INDEX


| SHEET NO. | SHEET DESCRIPTION |
|---|---|
| 1 | TITLE SHEET |
| 2 | GENERAL LAYOUT |
| 3 | STATEMENT OF QUANTITIES, STANDARD PLATES AND UTILITY OWNERS |
| 4–21 | EXISTING TOPOGRAPHY AND INPLACE UTILITIES |
| 22 | TRAFFIC CONTROL |
| 23–25 | STANDARD SIGN DETAILS |
| 26–27 | SIGNING TABULATIONS |
| 28–34 | SIGNING PLAN |
| 35–39 | STANDARD DETAILS |
| 40–44 | REVISE SIGNAL SYSTEM A |
| 45–48 | REVISE SIGNAL SYSTEM B |
| 49–51 | REVISE SIGNAL SYSTEM C |
| 52–55 | REVISE SIGNAL SYSTEM D |
| 56–60 | REVISE SIGNAL SYSTEM E |
| 61–64 | REVISE SIGNAL SYSTEM E1 |
| 65–68 | REVISE SIGNAL SYSTEM F |
| 69–71 | REVISE SIGNAL SYSTEM G |
| 72–74 | REVISE SIGNAL SYSTEM H |
| 75–77 | REVISE SIGNAL SYSTEM I |
| 78–79 | REVISE SIGNAL SYSTEM J |
| 80–82 | REVISE SIGNAL SYSTEM K |


THIS PLAN CONTAINS 82 SHEETS


ALLIANT ENGINEERING
233 Park Ave S, Ste 300
Minneapolis, MN 55415
612.758.3080 MAIN
612.758.3099 FAX
www.alliant-inc.com


RECOMMENDED FOR APPROVAL: CITY OF BLOOMINGTON TRAFFIC — DATE 5/19/14

APPROVED: CITY OF BLOOMINGTON ENGINEER — DATE 5/19/14

RECOMMENDED FOR APPROVAL: HENNEPIN COUNTY — DATE 5/23/14

APPROVED: HENNEPIN COUNTY: DIRECTOR OF TRANSPORTATION AND COUNTY ENGINEER — DATE 5/23/14

REVIEWED FOR COMPLIANCE WITH STATE AID & FEDERAL AID RULES/POLICY: DISTRICT STATE AID ENGINEER — DATE 6/9/14

APPROVED FOR STATE AID AND FEDERAL AID FUNDING: STATE AID ENGINEER — DATE 6/9/14

I HEREBY CERTIFY THAT THIS PLAN WAS PREPARED BY ME OR UNDER MY DIRECT SUPERVISION AND THAT I AM A DULY LICENSED PROFESSIONAL ENGINEER UNDER THE LAWS OF THE STATE OF MINNESOTA.

THOMAS JENSEN — LIC. NO. 44247 — DATE 4/30/14

I HEREBY CERTIFY THAT THE FINAL FIELD REVISIONS, IF ANY, WERE PREPARED BY ME OR UNDER BY DIRECT SUPERVISION AND THAT I AM A DULY LICENSED PROFESSIONAL ENGINEER UNDER THE LAWS OF THE STATE OF MINNESOTA.

THOMAS JENSEN — LIC. NO. — DATE

STATE PROJ. NO: 107-030-005



Drawing name: X:\2012\120092\PlanSheets\120092-tsh.dwg — Printed: May 16, 2014 – 10:11am

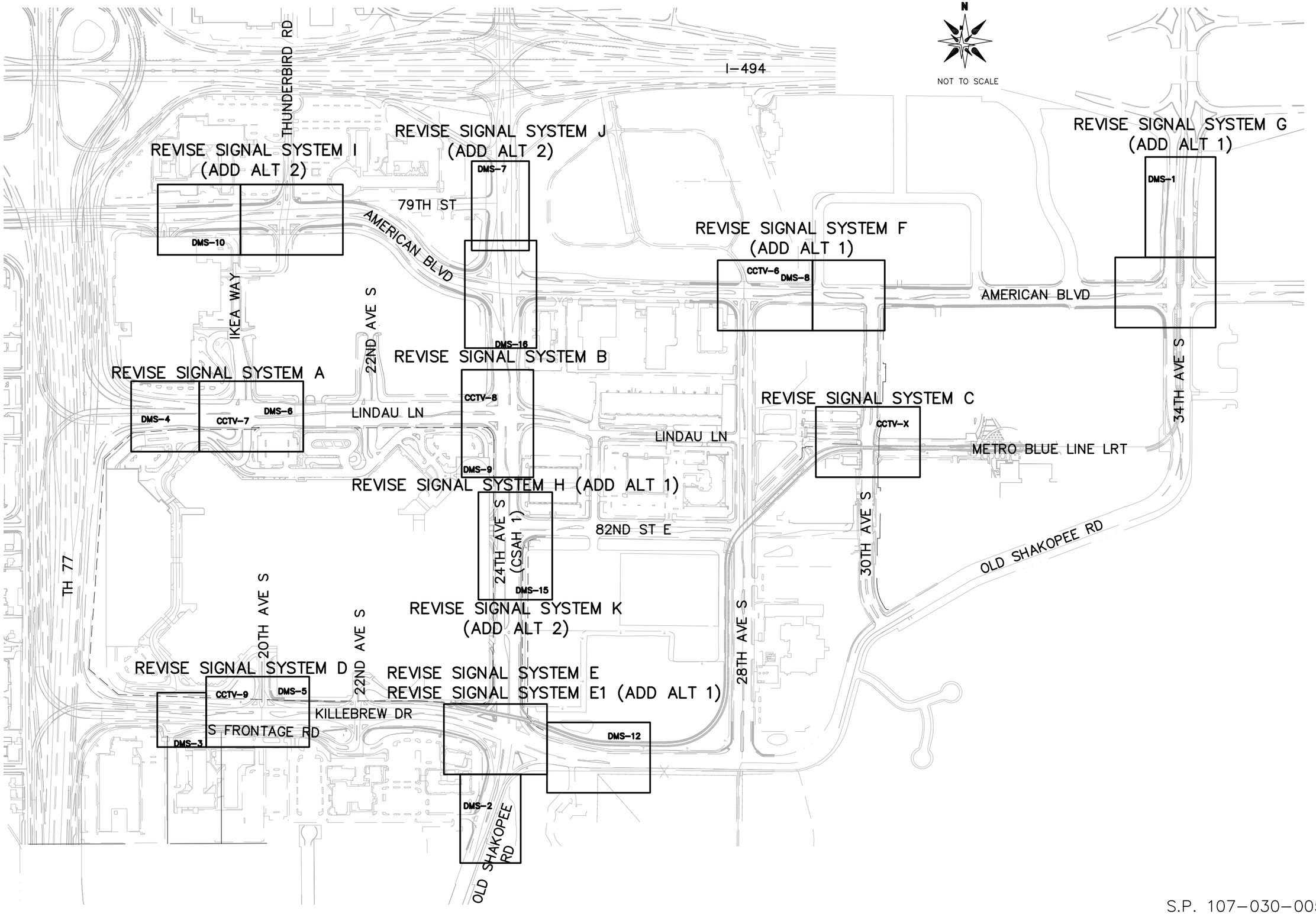


S.P. 107-030-005

2013-201 WAY FINDING PROJECT

GENERAL LAYOUT
REVISE SIGNAL SYSTEMS


CITY OF BLOOMINGTON MINNESOTA
1700 W 98TH ST.
BLOOMINGTON MN 55431
PHONE (952) 563-8700

ALLIANT ENGINEERING
233 Park Ave S, Ste 300
Minneapolis, MN 55415
612.758.3080 MAIN
612.758.3099 FAX
www.alliant-inc.com


REVISIONS

| DATE | DESCRIPTION | BY |
|---|---|---|
| | | |

I HEREBY CERTIFY THAT THIS PLAN, WAS PREPARED BY ME OR UNDER MY DIRECT SUPERVISION AND THAT I AM A DULY LICENSED PROFESSIONAL ENGINEER UNDER THE LAWS OF THE STATE OF MINNESOTA.

THOMAS JENSEN 44247 4/30/14
LIC. # DATE

DRAWN: KAS
CHECKED: TJJ
APPROVED: TJJ

SHEET:
02 OF 82

Drawing name: X:\2012\120092\PlanSheets\120092-genlay.dwg -- Printed: May 16, 2014 - 2:20pm

# STATEMENT OF ESTIMATED QUANTITIES

| TABULATION | SHEET NUMBER | ITEM NO. | ITEM | UNIT | S.P. 107-030-005 | | | | | | |
|---|---|---|---|---|---|---|---|---|---|---|---|
| | | | | | | BASE BID | | ADD ALTERNATIVE 1 | | ADD ALTERNATIVE 2 | |
| | | | | | TOTAL BASE BID ESTIMATED QUANTITY | ESTIMATED QUANTITY SP 107-030-005 PARTICIPATING | ESTIMATED QUANTITY LOCAL FUNDS NON-PARTICIPATING | ESTIMATED QUANTITY SP 107-030-005 PARTICIPATING | ESTIMATED QUANTITY LOCAL FUNDS NON-PARTICIPATING | ESTIMATED QUANTITY SP 107-030-005 PARTICIPATING | ESTIMATED QUANTITY LOCAL FUNDS NON-PARTICIPATING |
| | | 2021.501 | MOBILIZATION | LS | 1 | 1 | | | | | |
| | | 2104.503 | REMOVE CONCRETE WALK | SF | 540 | 540 | | 1152 | | 540 | |
| B | 26 | 2104.509 | REMOVE SIGN TYPE D | EACH | 1 | 1 | | | | | |
| B | 26 | 2104.523 | REMOVE SIGN PANEL TYPE SPECIAL | EACH | 4 | 4 | | | | | |
| | | 2105.526 | SELECT TOPSOIL BORROW (LV) | CY | 22 | 20 | 2 | 20 | 3 | 20 | 2 |
| | | 2521.501 | 4" CONCRETE WALK | SF | 0 | | | 72 | | | |
| | | 2563.601 | TRAFFIC CONTROL | LS | 1 | 1 | | | | | |
| A | 25 | 2564.531 | SIGN PANELS TYPE D | SF | 193 | 193 | | | | | |
| | | 2565.601 | TRAFFIC CONTROL INTERCONNECT A | LS | 1 | 1 | | | | | |
| | | 2565.601 | TRAFFIC CONTROL INTERCONNECT B | LS | 0 | | | 1 | | | |
| D | 39 | 2565.616 | REVISE SIGNAL SYSTEM A | SYS | 1 | 1 | | | | | |
| D | 39 | 2565.616 | REVISE SIGNAL SYSTEM B | SYS | 1 | 1 | | | | | |
| D | 39 | 2565.616 | REVISE SIGNAL SYSTEM C | SYS | 1 | 1 | | | | | |
| D | 39 | 2565.616 | REVISE SIGNAL SYSTEM D | SYS | 1 | 1 | | | | | |
| D | 39 | 2565.616 | REVISE SIGNAL SYSTEM E | SYS | 1 | 1 | | | | | |
| D | 39 | 2565.616 | REVISE SIGNAL SYSTEM E1 | SYS | 0 | | | 1 | | | |
| D | 39 | 2565.616 | REVISE SIGNAL SYSTEM F | SYS | 0 | | | 1 | | | |
| D | 39 | 2565.616 | REVISE SIGNAL SYSTEM G | SYS | 0 | | | 1 | | | |
| D | 39 | 2565.616 | REVISE SIGNAL SYSTEM H | SYS | 0 | | | 1 | | | |
| D | 39 | 2565.616 | REVISE SIGNAL SYSTEM I | SYS | 0 | | | | | 1 | |
| D | 39 | 2565.616 | REVISE SIGNAL SYSTEM J | SYS | 0 | | | | | 1 | |
| D | 39 | 2565.616 | REVISE SIGNAL SYSTEM K | SYS | 0 | | | | | 1 | |
| C | 38 | 2571.505 | DECIDUOUS SHRUB NO 5 CONT | SHRUB | 10 | | 10 | | 20 | | 10 |
| C | 38 | 2571.507 | PERENNIAL NO 2 CONT | PLANT | 8 | | 8 | | 16 | | 8 |
| | | 2575.505 | SODDING TYPE SALT RESISTANT | SY | 120 | 120 | | 120 | | 120 | |
| | | 2575.513 | MULCH MATERIAL TYPE 6 | CY | 1 | | 1 | | 2 | | 1 |
| | | 2575.601 | EROSION CONTROL | LS | 1 | 1 | | 1 | | 1 | |

## UTILITIES

NO UTILITIES WILL BE AFFECTED BY THIS PROJECT

| UTILITY OWNER | NOTE |
|---|---|
| ARVIG COMMUNICATION SYSTEMS | LEAVE AS IS |
| AT&T LOCAL SVCS/TRASMISSI-TCG | LEAVE AS IS |
| CENTERPOINT ENERGY | LEAVE AS IS |
| CENTURYLINK | LEAVE AS IS |
| CITY OF BLOOMINGTON | LEAVE AS IS |
| CITY OF BLOOMINGTON TRAFFIC | LEAVE AS IS |
| COMCAST | LEAVE AS IS |
| DEPARTMENT OF TRANSPORTATION | LEAVE AS IS |
| EVENTIS TELECOM | LEAVE AS IS |
| KOCH PIPELINE CO, LP | LEAVE AS IS |
| LIGHTCORE, A CENTURYLINK CO. | LEAVE AS IS |
| MCLEOD USA | LEAVE AS IS |
| METRO TRANSIT | LEAVE AS IS |
| METRO TRANSIT - LT RAIL | LEAVE AS IS |
| METRO WASTE COMMISION | LEAVE AS IS |
| METROPOLITAN AIRPORTS COMM. | LEAVE AS IS |
| SPRINT/LONG DISTANCE | LEAVE AS IS |
| TIME WARNER TELECOM | LEAVE AS IS |
| TTM OPERATING CORP | LEAVE AS IS |
| XCEL ENERGY | LEAVE AS IS |
| ZAYO BANDWITH | LEAVE AS IS |

THE FOLLOWING STANDARD PLATES APPROVED BY THE DEPT. OF TRANSPORTATION AND THE FEDERAL HIGHWAY ADMINISTRATION SHALL APPLY ON THIS PROJECT.

| STANDARD PLATES | |
|---|---|
| PLATE NO. | DESCRIPTION |
| 8000I | STANDARD BARRICADES |
| 8114A | P.V.C. HAND HOLE/PULL BOX (NO VEHICLE LOAD) |
| 8118D | SERVICE EQUIPMENT & POLE TRAFFIC CONTROL SIGNALS |

NOTE:

AWARD WILL BE BASED ON THE LOWEST RESPONSIVE BID CONSIDERING THE SUM OF THE BASE BID AND ANY ACCEPTABLE ALTERNATIVES, WHICH WILL BE CONSIDERED AND ACCEPTED IN THE ORDER LISTED. SEE SPECIAL PROVISIONS FOR ADDITIONAL INFORMATION.



2013-201 WAY FINDING PROJECT

STATEMENT OF ESTIMATED QUANTITIES, STANDARD PLATES AND UTILITY TABULATION

CITY OF BLOOMINGTON MINNESOTA
1700 W 98TH ST.
BLOOMINGTON MN 55431
PHONE (952) 563-8700

ALLIANT ENGINEERING
233 Park Ave S, Ste 300
Minneapolis, MN 55415
612.758.3080 MAIN
612.758.3099 FAX
www.alliant-inc.com

REVISIONS

| DATE | DESCRIPTION | BY |
|---|---|---|

I HEREBY CERTIFY THAT THIS PLAN WAS PREPARED BY ME OR UNDER MY DIRECT SUPERVISION AND THAT I AM A DULY LICENSED PROFESSIONAL ENGINEER UNDER THE LAWS OF THE STATE OF MINNESOTA.

THOMAS JENSEN 44247 4/30/14
LIC. # DATE

DRAWN: KAS
CHECKED: TJJ
APPROVED: TJJ

SHEET: 03 OF 82

Drawing name: X:\2012\120092\PlanSheets\120092-seq01.dwg -- Printed: Jun 02, 2014 - 7:49am

GENERAL NOTES:

1. COORDINATE WITH 2013-302 LINDAU LN PROJECT. EXISTING UTILITIES SHOWN MAY HAVE CHANGED IN THE FIELD DUE TO CONSTRUCTION.
2. CURBING AND MEDIANS SHOWN ON THIS SHEET ARE ARE PROPOSED CONSTRUCTION FOR 2013-302 LINDAU LN PROJECT.

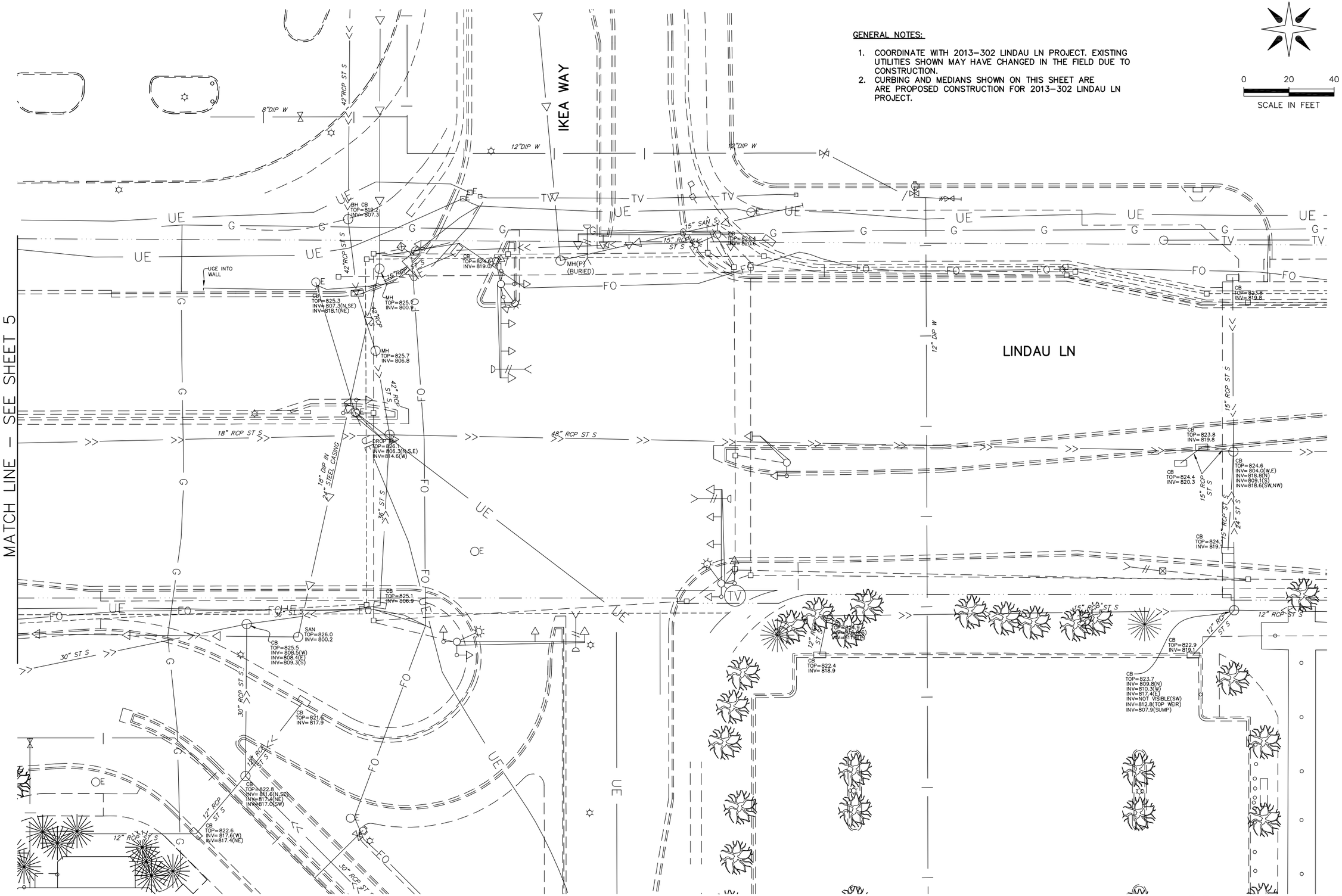


S.P. 107-030-005

2013-201 WAY FINDING PROJECT

REVISE SIGNAL SYSTEM A

LINDAU LN AND IKEA WAY

EXISTING TOPOGRAPHY AND INPLACE UTILITIES


CITY OF BLOOMINGTON MINNESOTA
1700 W 98TH ST. BLOOMINGTON MN 55431 PHONE (952) 563-8700

ALLIANT ENGINEERING
233 Park Ave S, Ste 300
Minneapolis, MN 55415
612.758.3080 MAIN
612.758.3099 FAX
www.alliant-inc.com


REVISIONS

| DATE | DESCRIPTION | BY |
|---|---|---|

I HEREBY CERTIFY THAT THIS PLAN WAS PREPARED BY ME OR UNDER MY DIRECT SUPERVISION AND THAT I AM A DULY LICENSED PROFESSIONAL ENGINEER UNDER THE LAWS OF THE STATE OF MINNESOTA.

THOMAS JENSEN 44247 LIC. # 4/30/14 DATE

DRAWN: KAS
CHECKED: TJJ
APPROVED: TJJ

SHEET: 04 OF 82

Drawing name: X:\2012\120092\PlanSheets\120092-existA.dwg -- Printed: May 16, 2014 - 1:57pm

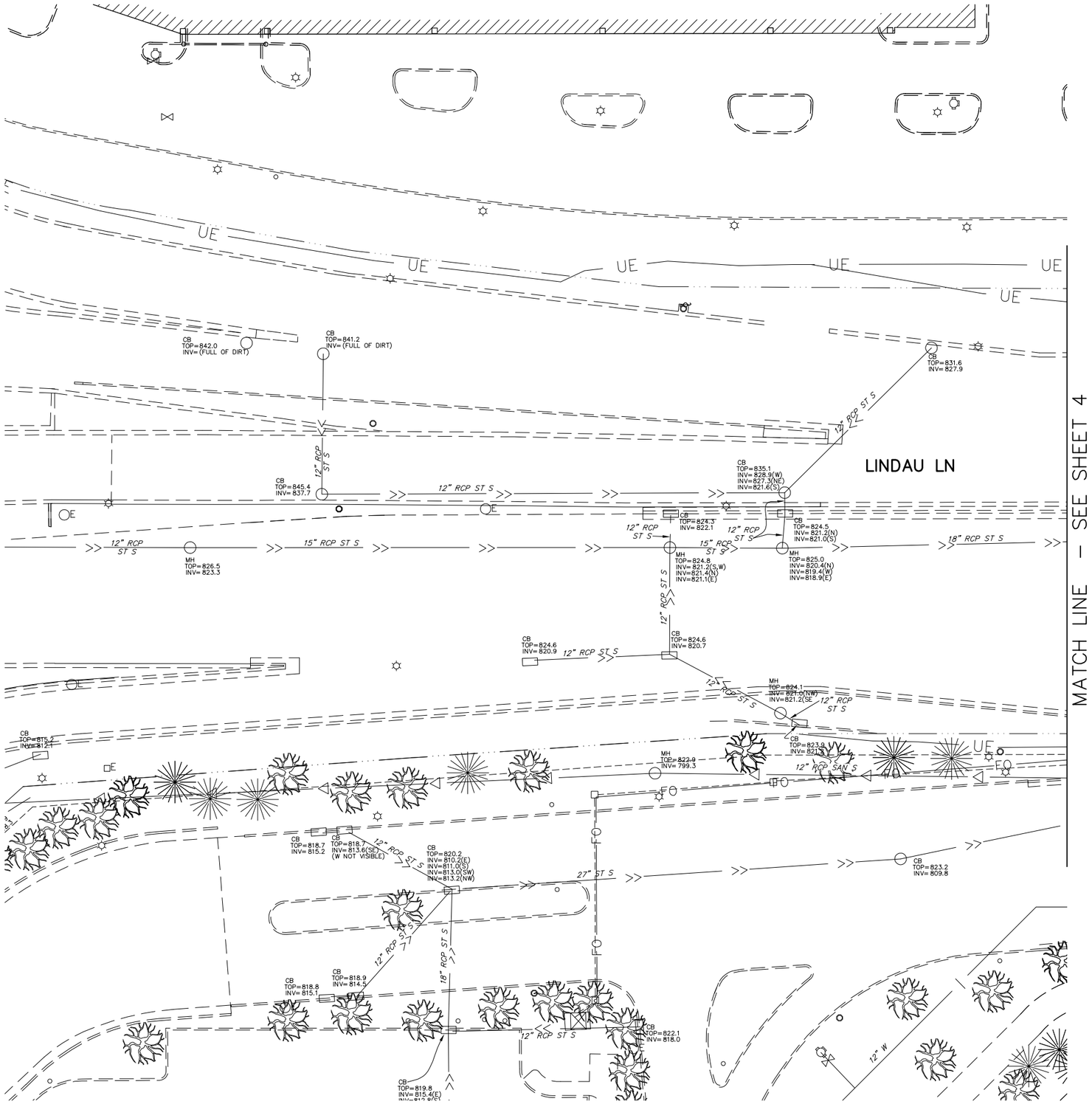


N

0 20 40

SCALE IN FEET

# 2013–201 WAY FINDING PROJECT

## REVISE SIGNAL SYSTEM A

LINDAU LN AND IKEA WAY

EXISTING TOPOGRAPHY AND INPLACE UTILITIES


CITY OF BLOOMINGTON MINNESOTA
1700 W 98TH ST.
BLOOMINGTON MN 55431
PHONE (952) 563-8700

ALLIANT ENGINEERING
233 Park Ave S, Ste 300
Minneapolis, MN 55415
612.758.3080 MAIN
612.758.3099 FAX
www.alliant-inc.com


REVISIONS

| DATE | DESCRIPTION | BY |
|---|---|---|
| | | |

I HEREBY CERTIFY THAT THIS PLAN WAS PREPARED BY ME OR UNDER MY DIRECT SUPERVISION AND THAT I AM A DULY LICENSED PROFESSIONAL ENGINEER UNDER THE LAWS OF THE STATE OF MINNESOTA.

THOMAS JENSEN 44247 4/30/14
LIC. # DATE

DRAWN: KAS
CHECKED: TJJ
APPROVED: TJJ

SHEET: 05 OF 82

S.P. 107–030–005

Drawing name: X:\2012\120092\PlanSheets\120092-existA.dwg -- Printed: May 16, 2014 - 1:56pm

Drawing name: X:\2012\120092\PlanSheets\120092-existB.dwg -- Printed: May 16, 2014 - 1:58pm

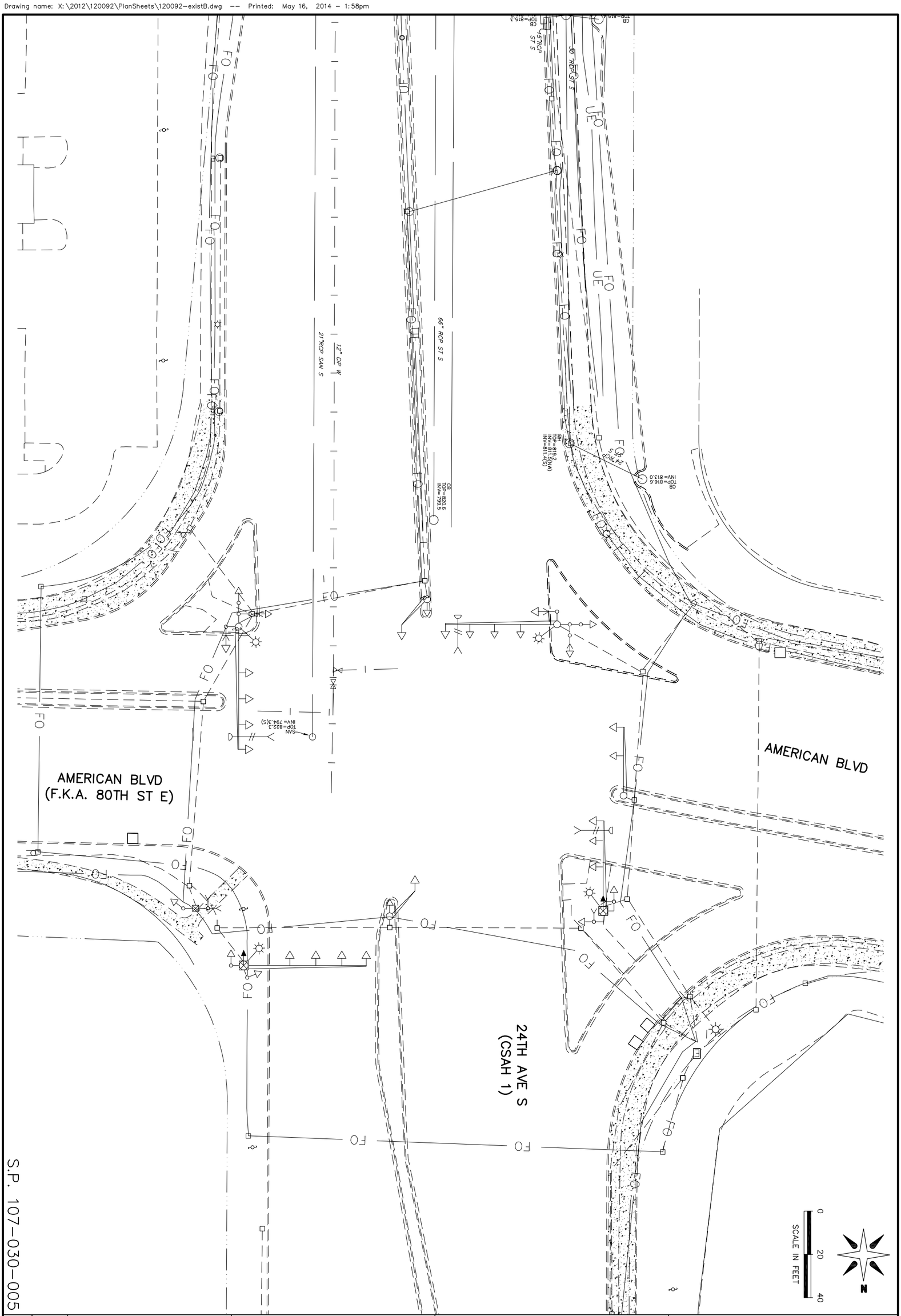


S.P. 107-030-005

SHEET: 06 OF 82

DRAWN: KAS
CHECKED: TJJ
APPROVED: TJJ

I HEREBY CERTIFY THAT THIS PLAN WAS PREPARED BY ME OR UNDER MY DIRECT SUPERVISION AND THAT I AM A DULY LICENSED PROFESSIONAL ENGINEER UNDER THE LAWS OF THE STATE OF MINNESOTA.

THOMAS JENSEN 44247 4/30/14
LIC. # DATE

REVISIONS

| DATE | DESCRIPTION | BY |
|---|---|---|
| | | |

CITY OF BLOOMINGTON MINNESOTA
1700 W 98TH ST.
BLOOMINGTON MN 55431
PHONE (952) 563-8700

ALLIANT ENGINEERING
233 Park Ave S, Ste 300
Minneapolis, MN 55415
612.758.3080 MAIN
612.758.3099 FAX
www.alliant-inc.com

2013-201 WAY FINDING PROJECT

REVISE SIGNAL SYSTEM B

AMERICAN BLVD AND 24TH AVE S (CSAH 1)

EXISTING TOPOGRAPHY AND INPLACE UTILITIES

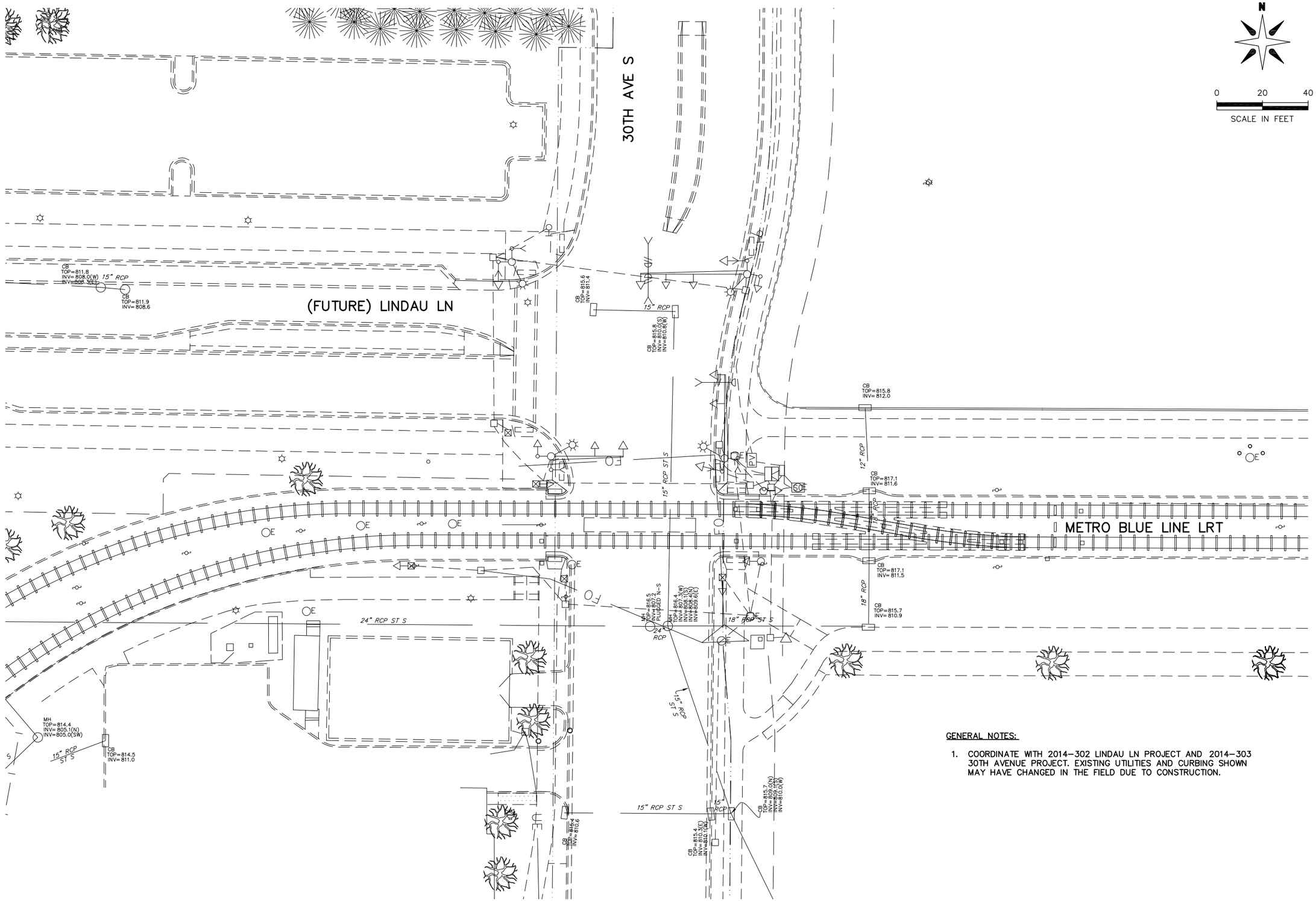


GENERAL NOTES:

1. COORDINATE WITH 2014-302 LINDAU LN PROJECT AND 2014-303 30TH AVENUE PROJECT. EXISTING UTILITIES AND CURBING SHOWN MAY HAVE CHANGED IN THE FIELD DUE TO CONSTRUCTION.

S.P. 107-030-005

# 2013-201 WAY FINDING PROJECT

## REVISE SIGNAL SYSTEM C

LINDAU LN AND 30TH AVE S

EXISTING TOPOGRAPHY AND INPLACE UTILITIES

CITY OF BLOOMINGTON MINNESOTA
1700 W 98TH ST.
BLOOMINGTON MN 55431
PHONE (952) 563-8700

ALLIANT ENGINEERING
233 Park Ave S, Ste 300
Minneapolis, MN 55415
612.758.3080 MAIN
612.758.3099 FAX
www.alliant-inc.com

REVISIONS

| DATE | DESCRIPTION | BY |
|---|---|---|
| | | |

I HEREBY CERTIFY THAT THIS PLAN WAS PREPARED BY ME OR UNDER MY DIRECT SUPERVISION AND THAT I AM A DULY LICENSED PROFESSIONAL ENGINEER UNDER THE LAWS OF THE STATE OF MINNESOTA.

THOMAS JENSEN 44247 4/30/14
LIC. # DATE

DRAWN: KAS
CHECKED: TJJ
APPROVED: TJJ

SHEET:
07 OF 82

Drawing name: X:\2012\120092\PlanSheets\120092-existC.dwg -- Printed: May 16, 2014 - 2:01pm

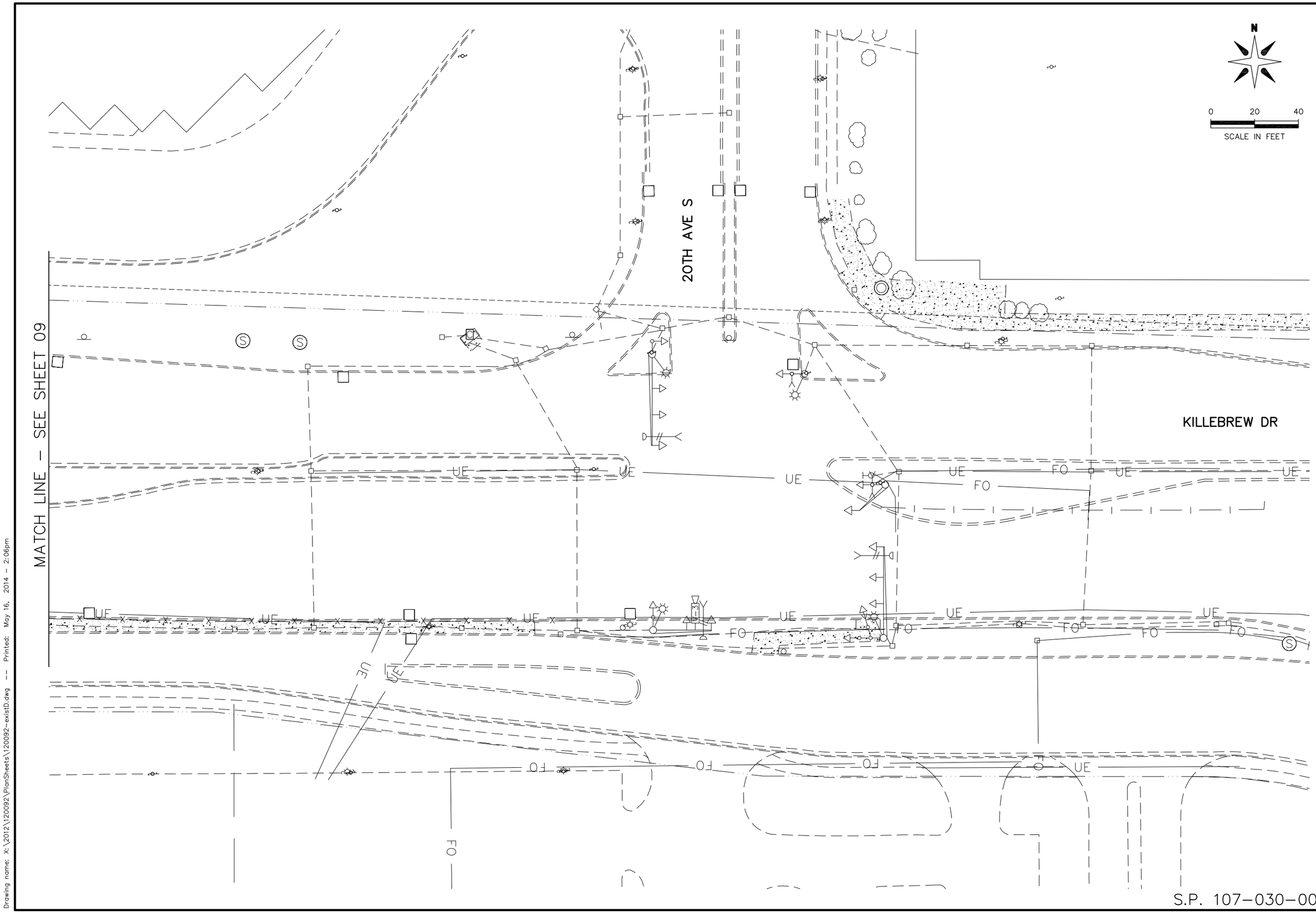


S.P. 107–030–005

# 2013–201 WAY FINDING PROJECT

## REVISE SIGNAL SYSTEM D

KILLEBREW DR AND 20TH AVE S

EXISTING TOPOGRAPHY AND INPLACE UTILITIES


CITY OF BLOOMINGTON MINNESOTA
1700 W 98TH ST.
BLOOMINGTON MN 55431
PHONE (952) 563-8700

ALLIANT ENGINEERING
233 Park Ave S, Ste 300
Minneapolis, MN 55415
612.758.3080 MAIN
612.758.3099 FAX
www.alliant-inc.com


REVISIONS

| DATE | DESCRIPTION | BY |
|---|---|---|
| | | |

I HEREBY CERTIFY THAT THIS PLAN WAS PREPARED BY ME OR UNDER MY DIRECT SUPERVISION AND THAT I AM A DULY LICENSED PROFESSIONAL ENGINEER UNDER THE LAWS OF THE STATE OF MINNESOTA.

THOMAS JENSEN 44247 4/30/14
LIC. # DATE

DRAWN: KAS
CHECKED: TJJ
APPROVED: TJJ

SHEET:
08 OF 82

Drawing name: X:\2012\120092\PlanSheets\120092-existD.dwg -- Printed: May 16, 2014 - 2:06pm

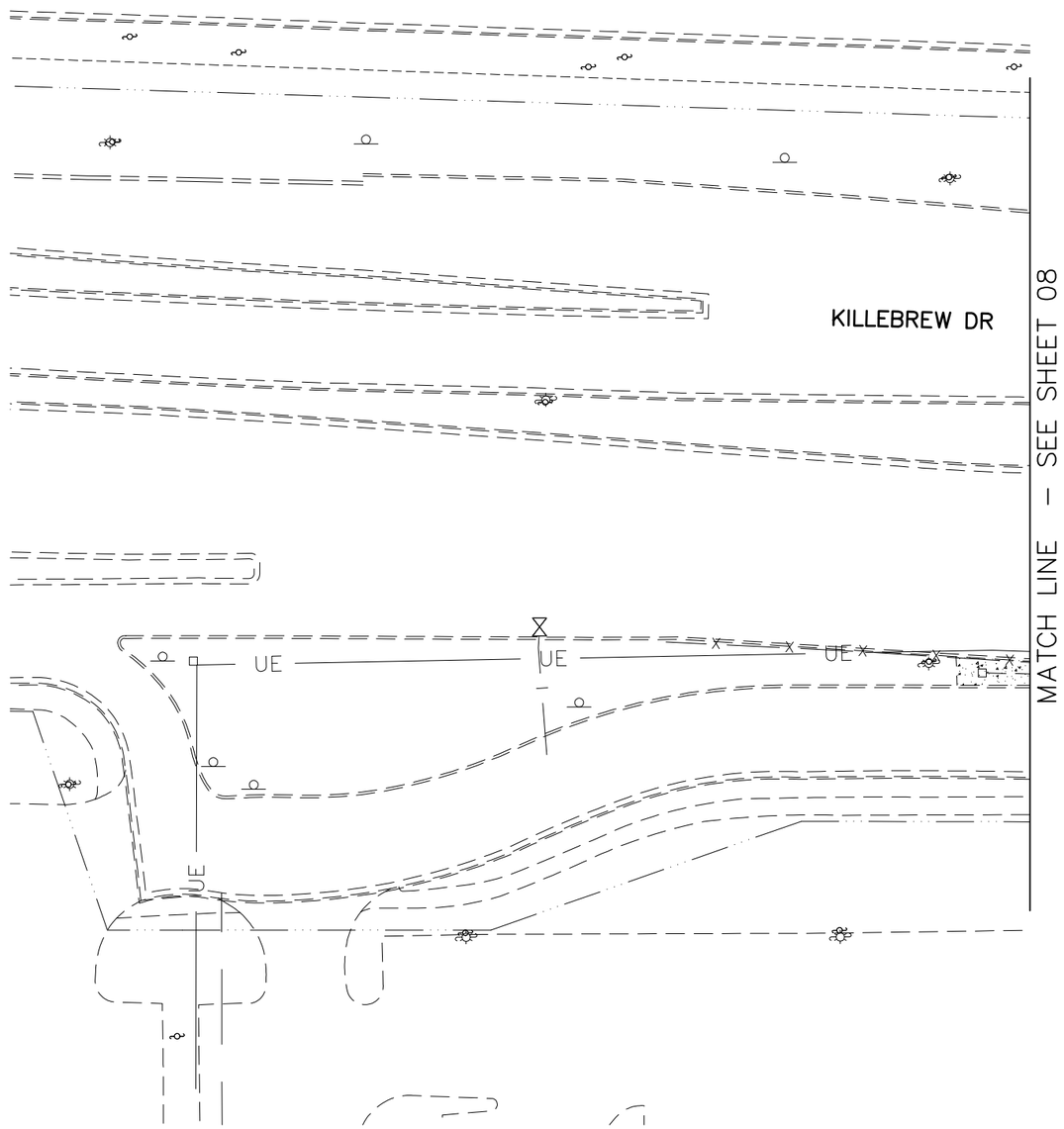


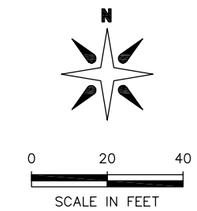


# 2013–201 WAY FINDING PROJECT

## REVISE SIGNAL SYTEM D

KILLEBREW DR AND 20TH AVE S

EXISTING TOPOGRAPHY AND INPLACE UTILITIES

CITY OF BLOOMINGTON MINNESOTA
1700 W 98TH ST.
BLOOMINGTON MN 55431
PHONE (952) 563-8700

ALLIANT ENGINEERING
233 Park Ave S, Ste 300
Minneapolis, MN 55415
612.758.3080 MAIN
612.758.3099 FAX
www.alliant-inc.com

REVISIONS

| DATE | DESCRIPTION | BY |
|---|---|---|
| | | |

I HEREBY CERTIFY THAT THIS PLAN WAS PREPARED BY ME OR UNDER MY DIRECT SUPERVISION AND THAT I AM A DULY LICENSED PROFESSIONAL ENGINEER UNDER THE LAWS OF THE STATE OF MINNESOTA.

THOMAS JENSEN 44247 4/30/14
LIC. # DATE

DRAWN: KAS
CHECKED: TJJ
APPROVED: TJJ

SHEET:
09 OF 82

S.P. 107–030–005

Drawing name: X:\2012\120092\PlanSheets\120092–existD.dwg -- Printed: May 16, 2014 – 2:05pm

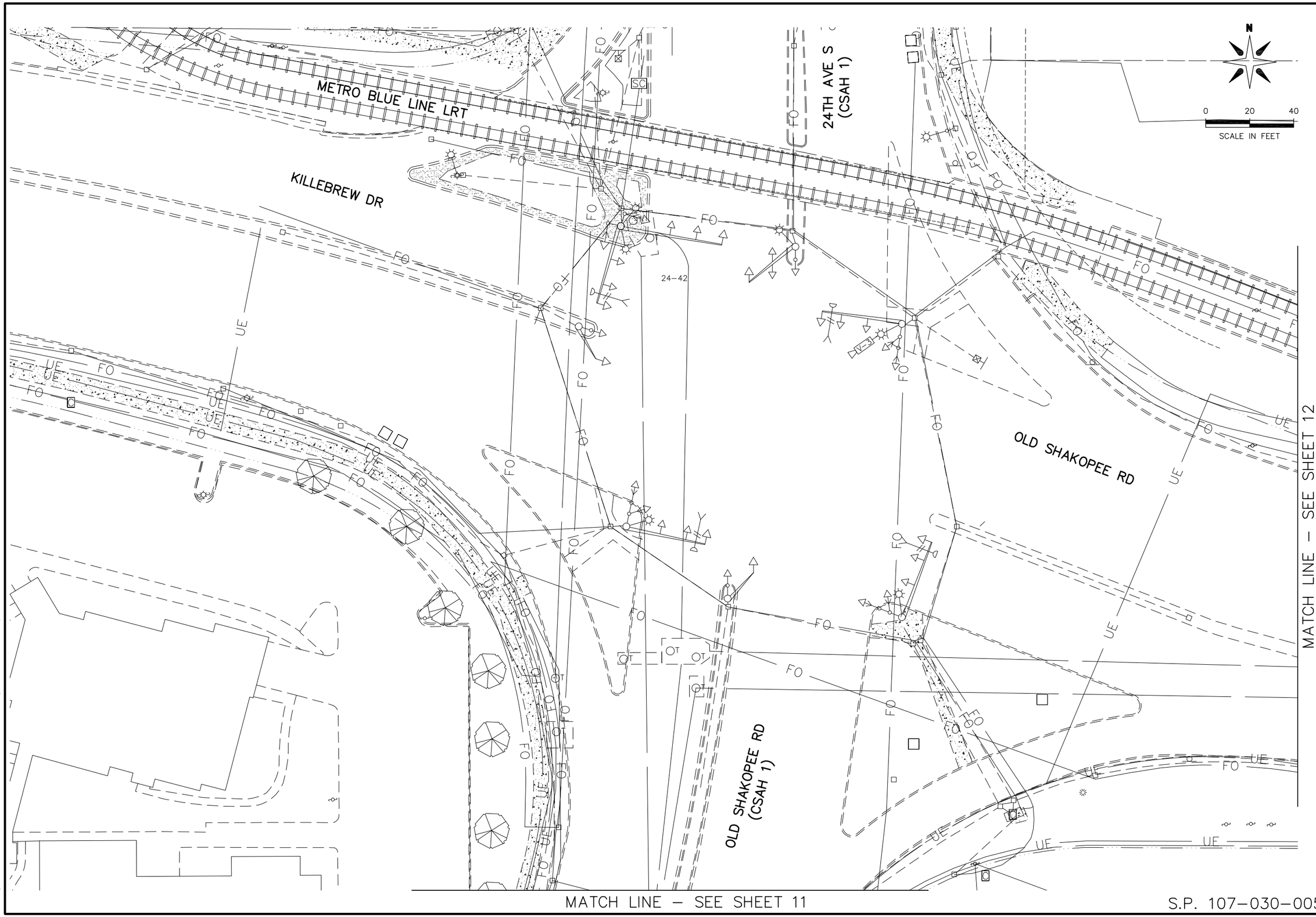


S.P. 107-030-005

# 2013-201 WAY FINDING PROJECT

## REVISE SIGNAL SYSTEM E

KILLEBREW DR AND OLD SHAKOPEE RD

EXISTING TOPOGRAPHY AND INPLACE UTILITIES

CITY OF BLOOMINGTON MINNESOTA
1700 W 98TH ST.
BLOOMINGTON MN 55431
PHONE (952) 563-8700

ALLIANT ENGINEERING
233 Park Ave S, Ste 300
Minneapolis, MN 55415
612.758.3080 MAIN
612.758.3099 FAX
www.alliant-inc.com

REVISIONS

| DATE | DESCRIPTION | BY |
|---|---|---|
| | | |

I HEREBY CERTIFY THAT THIS PLAN WAS PREPARED BY ME OR UNDER MY DIRECT SUPERVISION AND THAT I AM A DULY LICENSED PROFESSIONAL ENGINEER UNDER THE LAWS OF THE STATE OF MINNESOTA.

THOMAS JENSEN 44247 4/30/14
LIC. # DATE

DRAWN: KAS
CHECKED: TJJ
APPROVED: TJJ

SHEET:
10 OF 82

Drawing name: X:\2012\120092\PlanSheets\120092-existE.dwg -- Printed: May 16, 2014 - 2:07pm

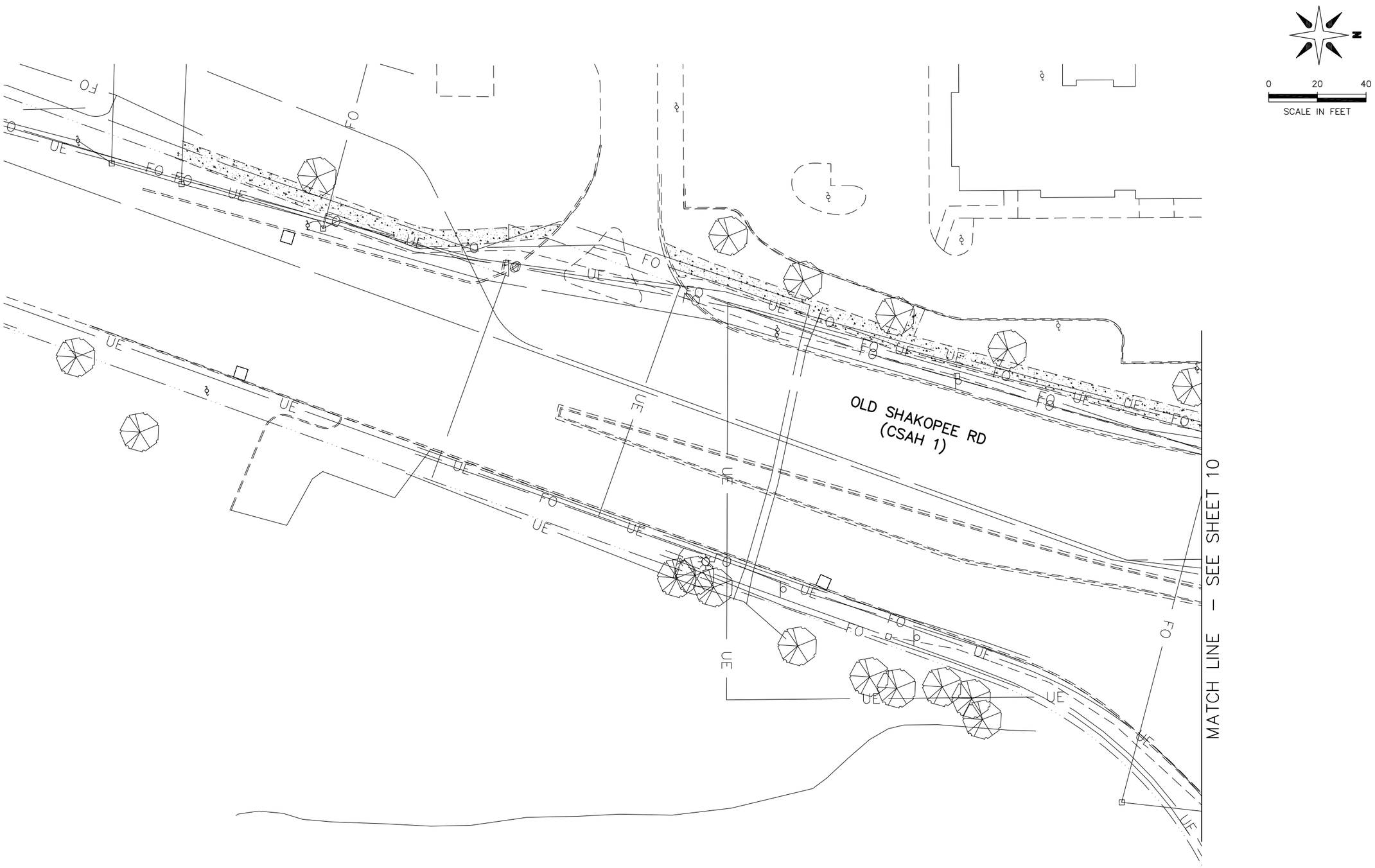


# 2013-201 WAY FINDING PROJECT

## REVISE SIGNAL SYTEM E

KILLEBREW DR AND OLD SHAKOPEE RD

EXISTING TOPOGRAPHY AND INPLACE UTILITIES

CITY OF BLOOMINGTON MINNESOTA
1700 W 98TH ST.
BLOOMINGTON MN 55431
PHONE (952) 563-8700

ALLIANT ENGINEERING
233 Park Ave S, Ste 300
Minneapolis, MN 55415
612.758.3080 MAIN
612.758.3099 FAX
www.alliant-inc.com

REVISIONS

| DATE | DESCRIPTION | BY |
|---|---|---|
| | | |

I HEREBY CERTIFY THAT THIS PLAN WAS PREPARED BY ME OR UNDER MY DIRECT SUPERVISION AND THAT I AM A DULY LICENSED PROFESSIONAL ENGINEER UNDER THE LAWS OF THE STATE OF MINNESOTA.

THOMAS JENSEN 44247 4/30/14
LIC. # DATE

DRAWN: KAS
CHECKED: TJJ
APPROVED: TJJ

SHEET:
11 OF 82

S.P. 107-030-005

Drawing name: X:\2012\120092\PlanSheets\120092-existE.dwg -- Printed: May 16, 2014 - 2:08pm

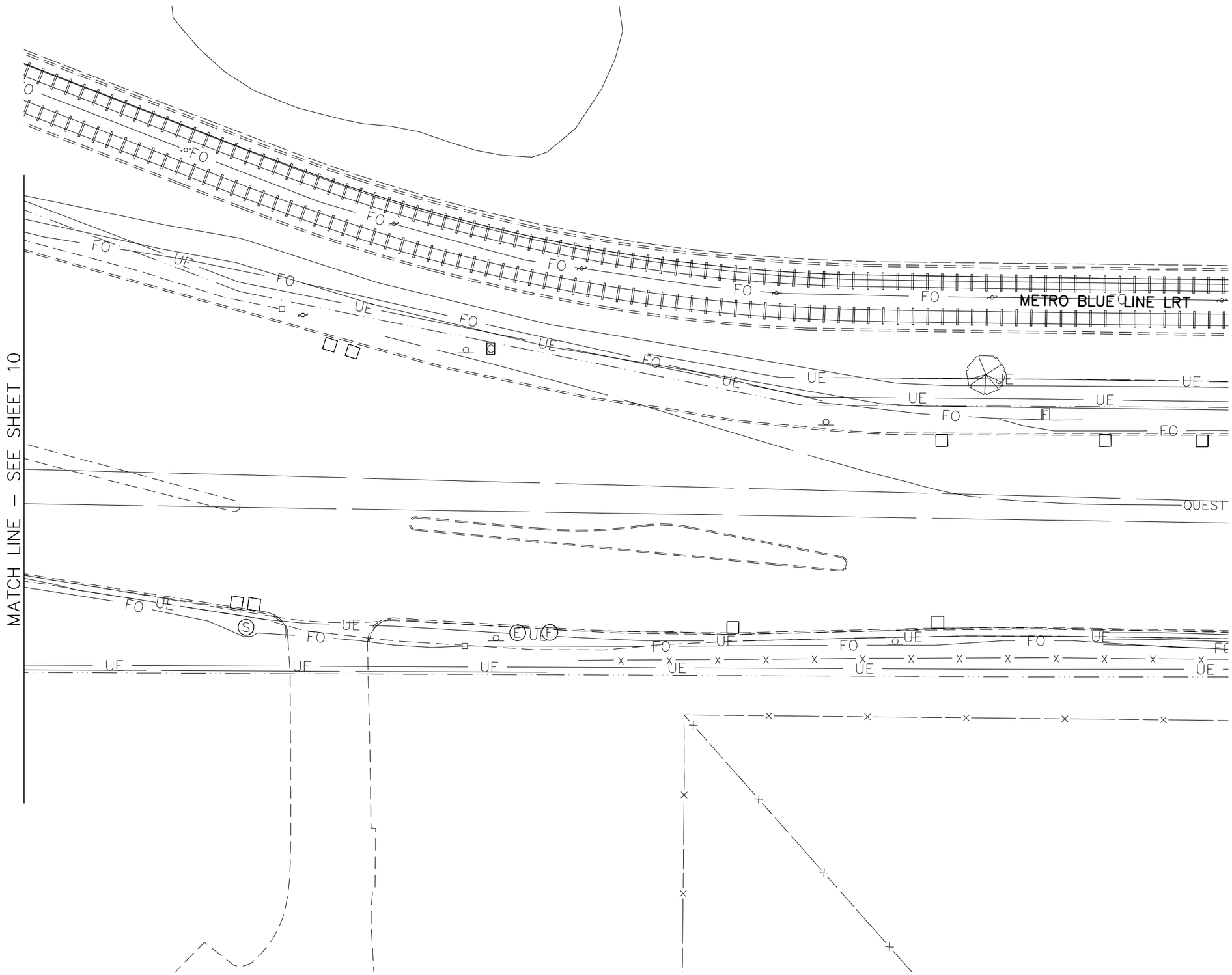


# 2013-201 WAY FINDING PROJECT

## REVISE SIGNAL SYSTEM E1

KILLEBREW DR AND OLD SHAKOPEE RD

EXISTING TOPOGRAPHY AND INPLACE UTILITIES


CITY OF BLOOMINGTON MINNESOTA
1700 W 98TH ST.
BLOOMINGTON MN 55431
PHONE (952) 563-8700

ALLIANT ENGINEERING
233 Park Ave S, Ste 300
Minneapolis, MN 55415
612.758.3080 MAIN
612.758.3099 FAX
www.alliant-inc.com


REVISIONS

| DATE | DESCRIPTION | BY |
|---|---|---|
| | | |

I HEREBY CERTIFY THAT THIS PLAN WAS PREPARED BY ME OR UNDER MY DIRECT SUPERVISION AND THAT I AM A DULY LICENSED PROFESSIONAL ENGINEER UNDER THE LAWS OF THE STATE OF MINNESOTA.

THOMAS JENSEN 44247 4/30/14
LIC. # DATE

DRAWN: KAS
CHECKED: TJJ
APPROVED: TJJ

SHEET: 12 OF 82

S.P. 107-030-005

Drawing name: X:\2012\120092\PlanSheets\120092-existE.dwg -- Printed: May 16, 2014 - 2:09pm

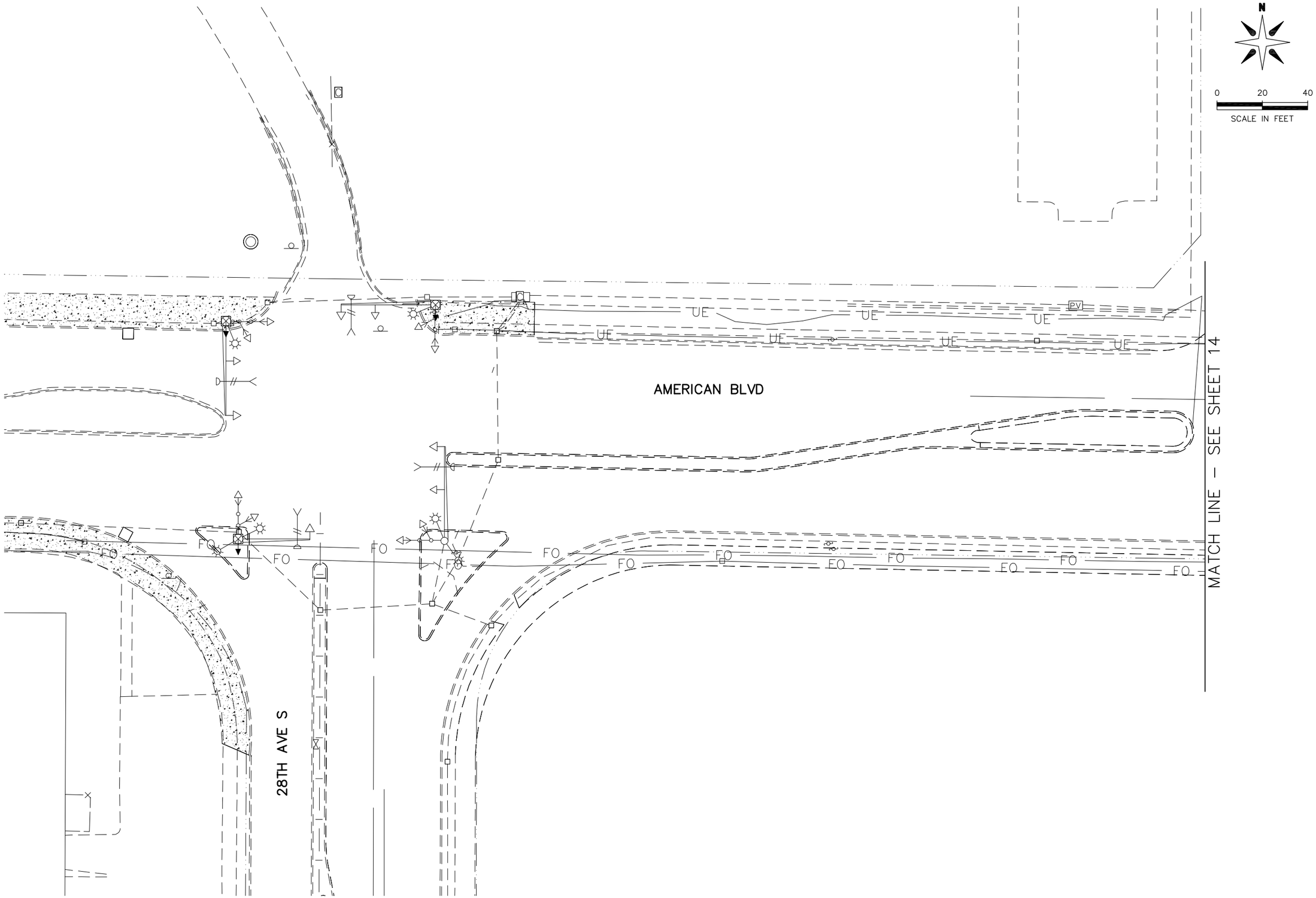


# 2013-201 WAY FINDING PROJECT

## REVISE SIGNAL SYSTEM F

AMERICAN BLVD AND 28TH AVE S

EXISTING TOPOGRAPHY AND INPLACE UTILITIES


CITY OF BLOOMINGTON MINNESOTA
1700 W 98TH ST.
BLOOMINGTON MN 55431
PHONE (952) 563-8700

ALLIANT ENGINEERING
233 Park Ave S, Ste 300
Minneapolis, MN 55415
612.758.3080 MAIN
612.758.3099 FAX
www.alliant-inc.com


REVISIONS

| DATE | DESCRIPTION | BY |
|---|---|---|
| | | |

I HEREBY CERTIFY THAT THIS PLAN WAS PREPARED BY ME OR UNDER MY DIRECT SUPERVISION AND THAT I AM A DULY LICENSED PROFESSIONAL ENGINEER UNDER THE LAWS OF THE STATE OF MINNESOTA.

THOMAS JENSEN — LIC. # 44247 — DATE 4/30/14

DRAWN: KAS
CHECKED: TJJ
APPROVED: TJJ

SHEET: 13 OF 82

S.P. 107-030-005

Drawing name: X:\2012\120092\PlanSheets\120092-existF.dwg -- Printed: May 16, 2014 - 2:11pm

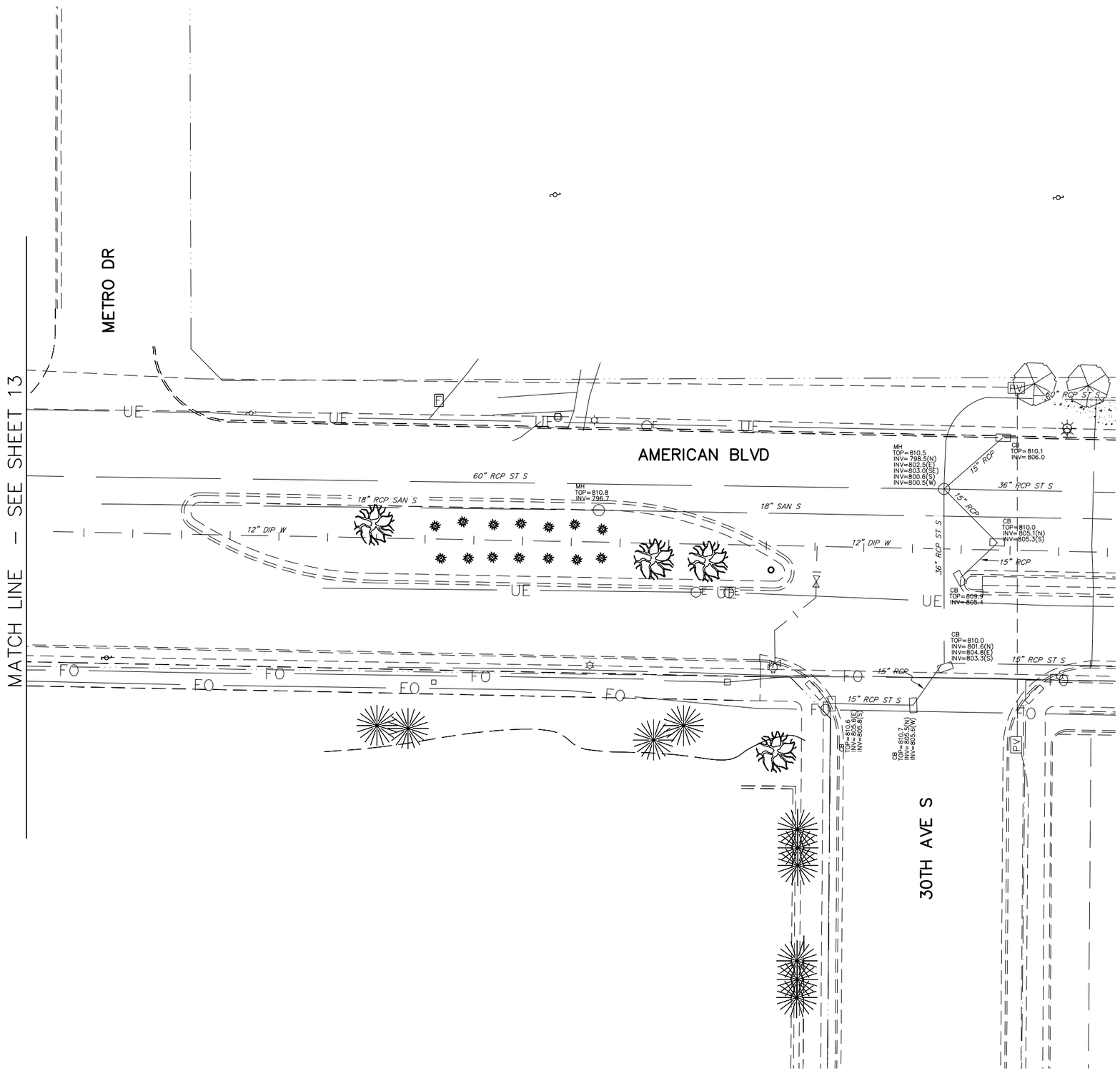


N

0 20 40

SCALE IN FEET

GENERAL NOTES:

1. COORDINATE WITH 2014–303 30TH AVENUE PROJECT. EXISTING UTILITIES AND CURBING SHOWN MAY HAVE CHANGED IN THE FIELD DUE TO CONSTRUCTION.

S.P. 107–030–005

# 2013–201 WAY FINDING PROJECT

## REVISE SIGNAL SYTEM F

AMERICAN BLVD AND 28TH AE S

EXISTING TOPOGRAPHY AND INPLACE UTILITIES


CITY OF BLOOMINGTON MINNESOTA
1700 W 98TH ST.
BLOOMINGTON MN 55431
PHONE (952) 563-8700

ALLIANT ENGINEERING
233 Park Ave S, Ste 300
Minneapolis, MN 55415
612.758.3080 MAIN
612.758.3099 FAX
www.alliant-inc.com


REVISIONS

| DATE | DESCRIPTION | BY |
|---|---|---|
| | | |

I HEREBY CERTIFY THAT THIS PLAN WAS PREPARED BY ME OR UNDER MY DIRECT SUPERVISION AND THAT I AM A DULY LICENSED PROFESSIONAL ENGINEER UNDER THE LAWS OF THE STATE OF MINNESOTA.

THOMAS JENSEN 44247 4/30/14
LIC. # DATE

DRAWN: KAS
CHECKED: TJJ
APPROVED: TJJ

SHEET:
14 OF 82

Drawing name: X:\2012\120092\PlanSheets\120092-existF.dwg -- Printed: May 16, 2014 - 2:10pm

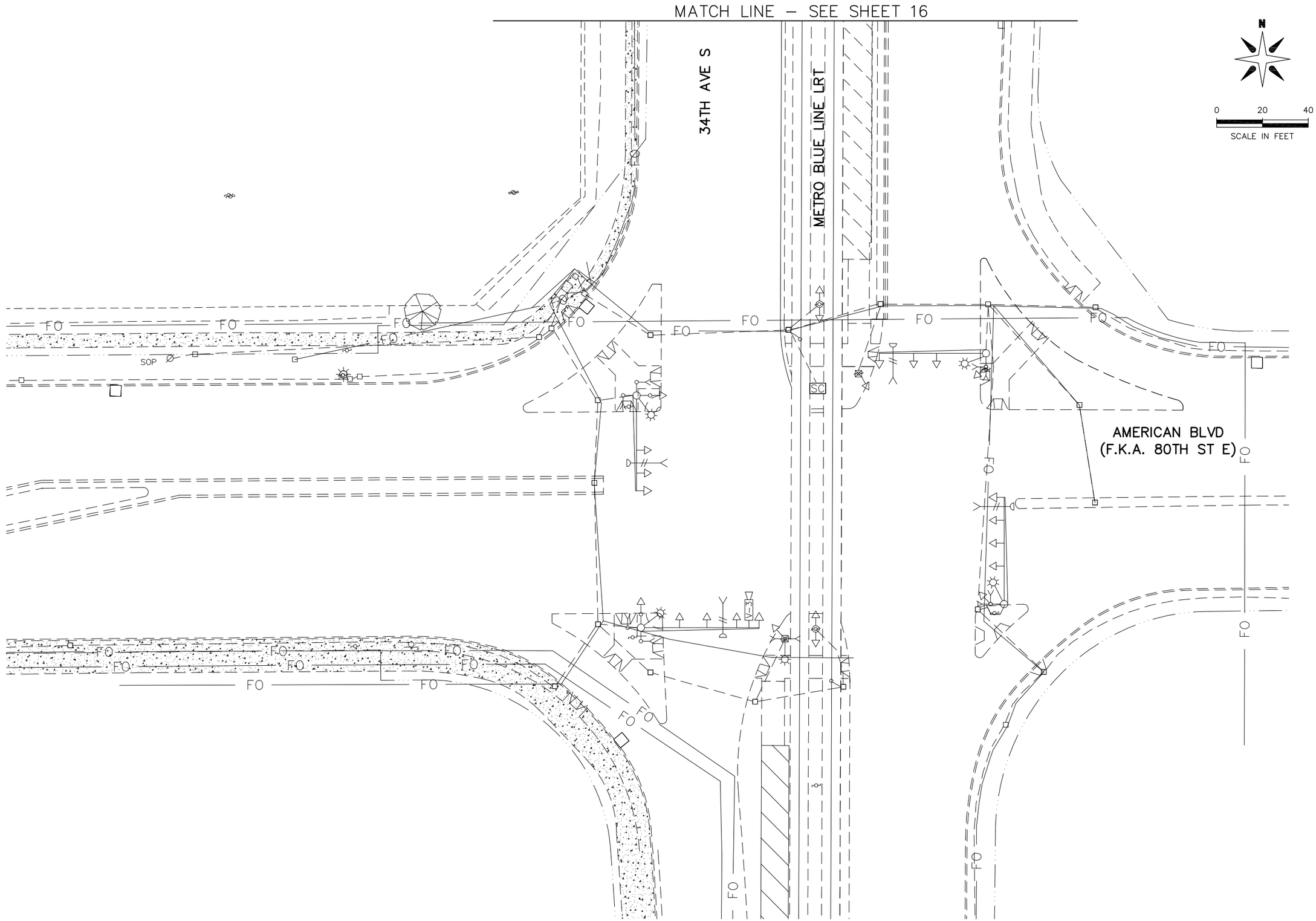


S.P. 107–030–005

# 2013–201 WAY FINDING PROJECT

REVISE SIGNAL SYTEM G
AMERICAN BLVD AND 34TH AVE S
EXISTING TOPOGRAPHY AND INPLACE UTILITIES

CITY OF BLOOMINGTON MINNESOTA
1700 W 98TH ST.
BLOOMINGTON MN 55431
PHONE (952) 563-8700

ALLIANT ENGINEERING
233 Park Ave S, Ste 300
Minneapolis, MN 55415
612.758.3080 MAIN
612.758.3099 FAX
www.alliant-inc.com

REVISIONS

| DATE | DESCRIPTION | BY |
|---|---|---|
| | | |

I HEREBY CERTIFY THAT THIS PLAN WAS PREPARED BY ME OR UNDER MY DIRECT SUPERVISION AND THAT I AM A DULY LICENSED PROFESSIONAL ENGINEER UNDER THE LAWS OF THE STATE OF MINNESOTA.

THOMAS JENSEN 44247 4/30/14
LIC. # DATE

DRAWN: KAS
CHECKED: TJJ
APPROVED: TJJ

SHEET:
15 OF 82

Drawing name: X:\2012\120092\PlanSheets\120092-existG.dwg -- Printed: May 16, 2014 - 2:12pm

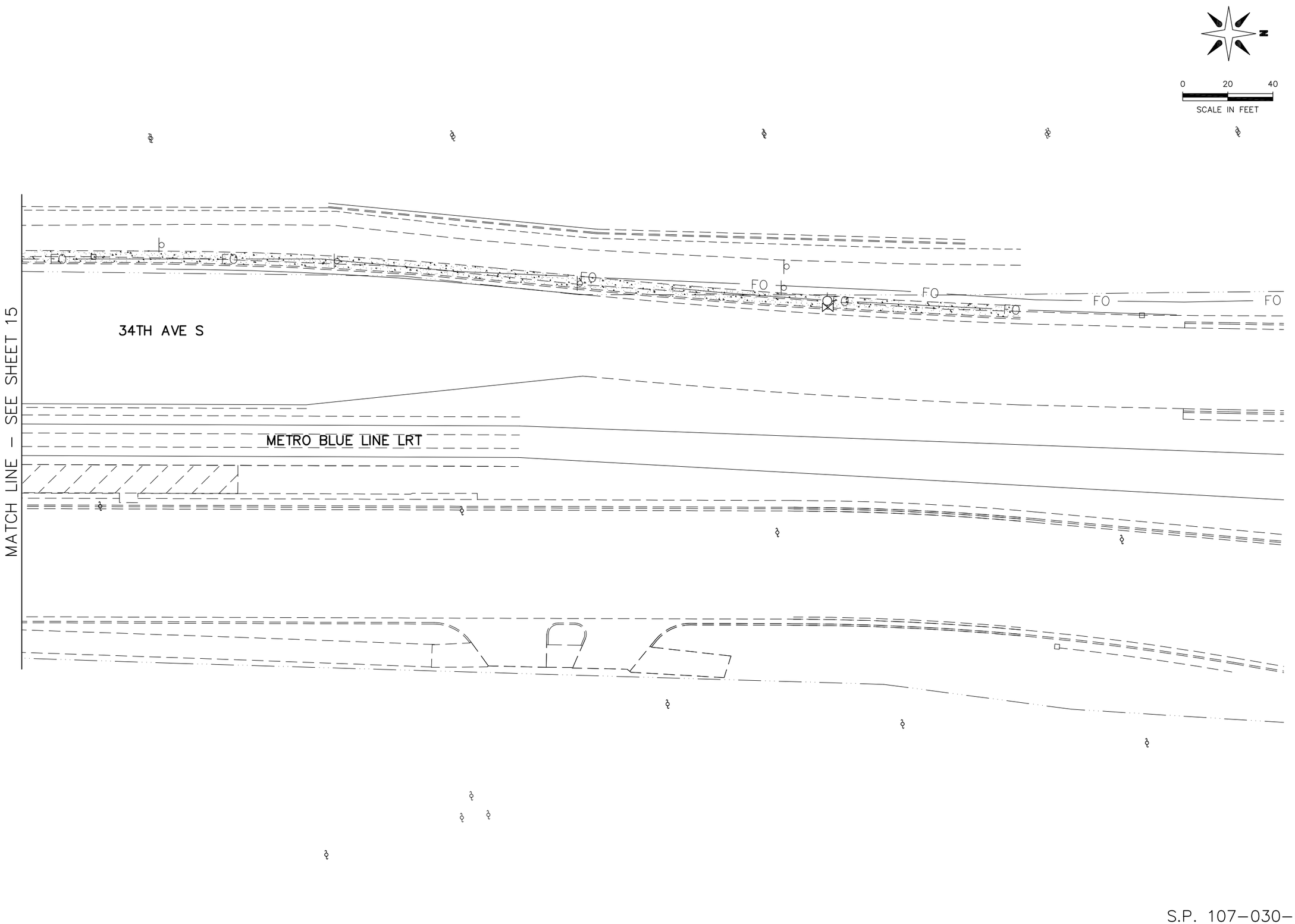


S.P. 107–030–005

# 2013–201 WAY FINDING PROJECT

## REVISE SIGNAL SYSTEM G

AMERICAN BLVD AND 34TH AVE S

EXISTING TOPOGRAPHY AND INPLACE UTILITIES


CITY OF BLOOMINGTON MINNESOTA
1700 W 98TH ST.
BLOOMINGTON MN 55431
PHONE (952) 563-8700

ALLIANT ENGINEERING
233 Park Ave S, Ste 300
Minneapolis, MN 55415
612.758.3080 MAIN
612.758.3099 FAX
www.alliant-inc.com


REVISIONS

| DATE | DESCRIPTION | BY |
|---|---|---|
| | | |

I HEREBY CERTIFY THAT THIS PLAN WAS PREPARED BY ME OR UNDER MY DIRECT SUPERVISION AND THAT I AM A DULY LICENSED PROFESSIONAL ENGINEER UNDER THE LAWS OF THE STATE OF MINNESOTA.

THOMAS JENSEN 44247 4/30/14
LIC. # DATE

DRAWN: KAS
CHECKED: TJJ
APPROVED: TJJ

SHEET:
16 OF 82

Drawing name: X:\2012\120092\PlanSheets\120092-existG.dwg -- Printed: May 16, 2014 - 2:13pm

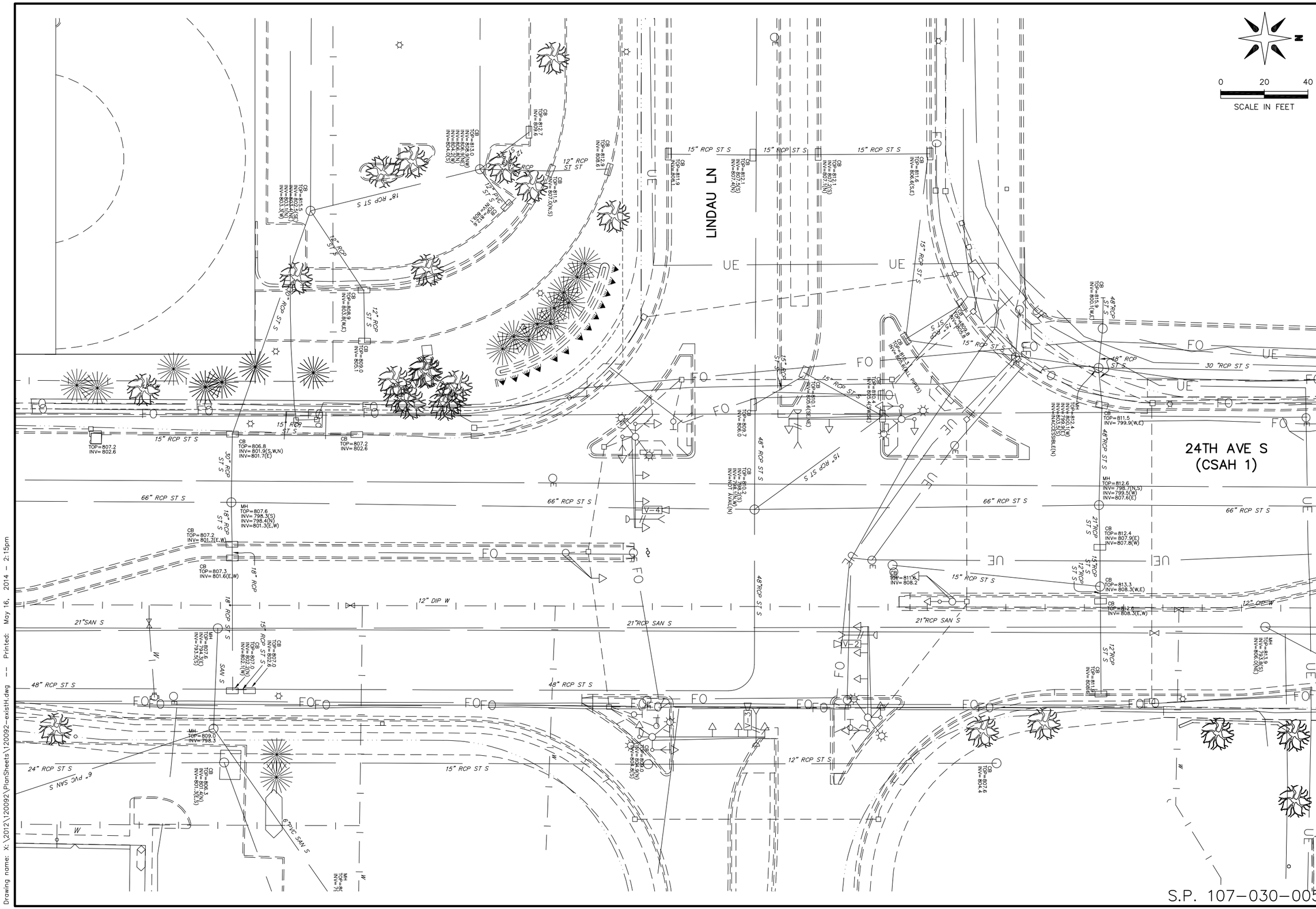


S.P. 107-030-005

# 2013-201 WAY FINDING PROJECT

## REVISE SIGNAL SYSTEM H

LINDAU LN AND 24TH AVE S

EXISTING TOPOGRAPHY AND INPLACE UTILITIES


CITY OF BLOOMINGTON MINNESOTA
1700 W 98TH ST.
BLOOMINGTON MN 55431
PHONE (952) 563-8700

ALLIANT ENGINEERING
233 Park Ave S, Ste 300
Minneapolis, MN 55415
612.758.3080 MAIN
612.758.3099 FAX
www.alliant-inc.com


REVISIONS

| DATE | DESCRIPTION | BY |
|---|---|---|
| | | |

I HEREBY CERTIFY THAT THIS PLAN WAS PREPARED BY ME OR UNDER MY DIRECT SUPERVISION AND THAT I AM A DULY LICENSED PROFESSIONAL ENGINEER UNDER THE LAWS OF THE STATE OF MINNESOTA.

THOMAS JENSEN 44247 LIC. # 4/30/14 DATE

DRAWN: KAS
CHECKED: TJJ
APPROVED: TJJ

SHEET: 17 OF 82

Drawing name: X:\2012\120092\PlanSheets\120092-existH.dwg -- Printed: May 16, 2014 - 2:15pm

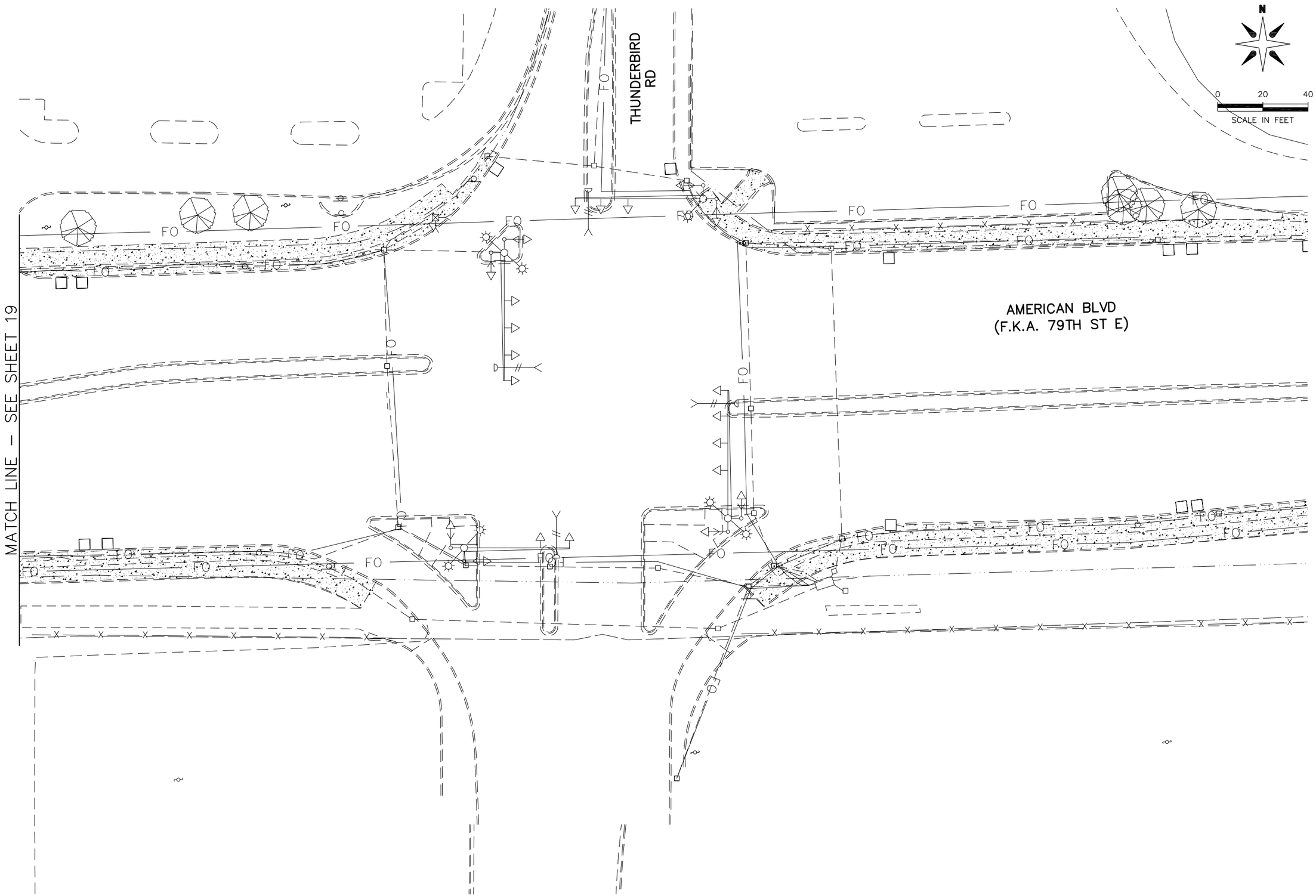


S.P. 107–030–005

# 2013–201 WAY FINDING PROJECT

## REVISE SIGNAL SYSTEM I

AMERICAN BLVD AND THUNDERBIRD RD
EXISTING TOPOGRAPHY AND INPLACE UTILITIES

CITY OF BLOOMINGTON MINNESOTA
1700 W 98TH ST.
BLOOMINGTON MN 55431
PHONE (952) 563-8700

ALLIANT ENGINEERING, INC.
233 PARK AVE. SOUTH, SUITE 300
MINNEAPOLIS, MN 55415
PHONE (612) 758-3080
FAX (612) 758-3099

REVISIONS

| DATE | DESCRIPTION | BY |
|---|---|---|
| | | |

I HEREBY CERTIFY THAT THIS PLAN WAS PREPARED BY ME OR UNDER MY DIRECT SUPERVISION AND THAT I AM A DULY LICENSED PROFESSIONAL ENGINEER UNDER THE LAWS OF THE STATE OF MINNESOTA.

THOMAS JENSEN 44247 4/30/14
LIC. # DATE

DRAWN: KAS
CHECKED: TJJ
APPROVED: TJJ

SHEET:
18 OF 82

Drawing name: X:\2012\120092\PlanSheets\120092-existl.dwg -- Printed: May 16, 2014 - 2:17pm

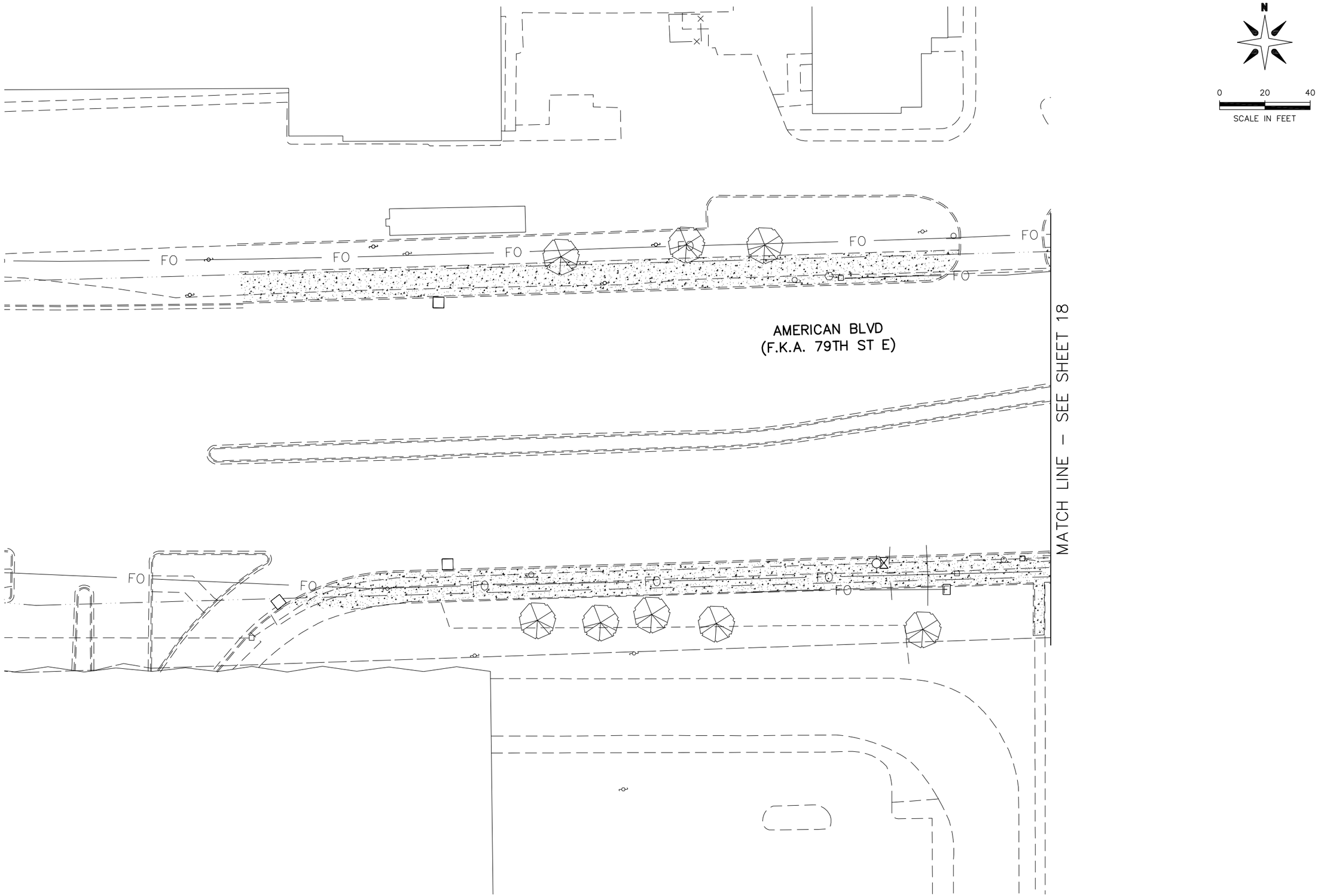


2013–201 WAY FINDING PROJECT

REVISE SIGNAL SYSTEM I

AMERICAN BLVD AND THUNDERBIRD RD

EXISTING TOPOGRAPHY AND INPLACE UTILITIES

CITY OF BLOOMINGTON MINNESOTA
1700 W 98TH ST.
BLOOMINGTON MN 55431
PHONE (952) 563-8700

ALLIANT ENGINEERING
233 Park Ave S, Ste 300
Minneapolis, MN 55415
612.758.3080 MAIN
612.758.3099 FAX
www.alliant-inc.com

REVISIONS

| DATE | DESCRIPTION | BY |
|---|---|---|
| | | |

I HEREBY CERTIFY THAT THIS PLAN WAS PREPARED BY ME OR UNDER MY DIRECT SUPERVISION AND THAT I AM A DULY LICENSED PROFESSIONAL ENGINEER UNDER THE LAWS OF THE STATE OF MINNESOTA.

THOMAS JENSEN 44247 4/30/14
LIC. # DATE

DRAWN: KAS
CHECKED: TJJ
APPROVED: TJJ

SHEET:
19 OF 82

S.P. 107–030–005

Drawing name: X:\2012\120092\PlanSheets\120092-existl.dwg -- Printed: May 16, 2014 - 2:16pm

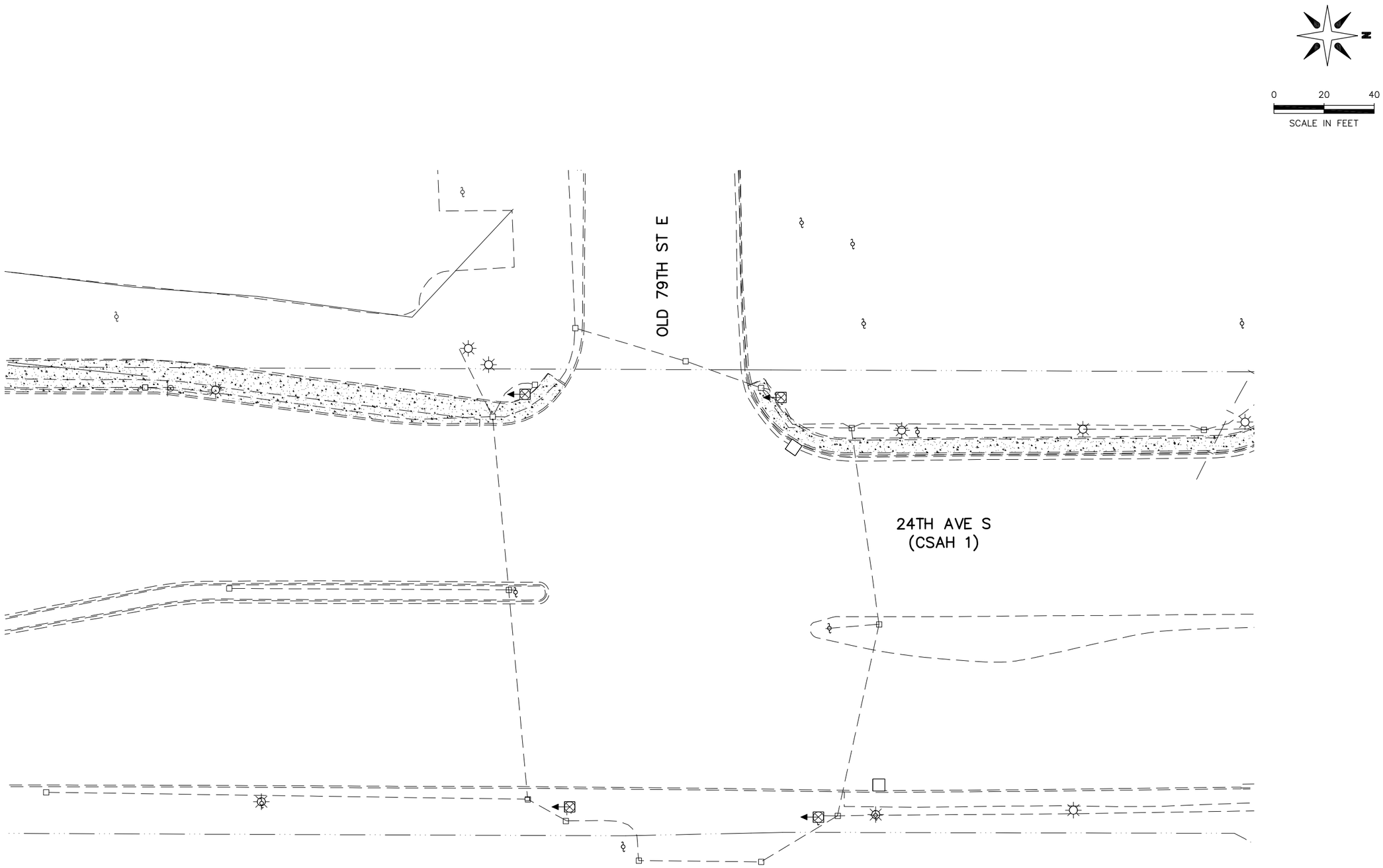


S.P. 107-030-005

# 2013-201 WAY FINDING PROJECT

## REVISE SIGNAL SYSTEM J

78TH ST AT 24TH AVE S

EXISTING TOPOGRAPHY AND INPLACE UTILITIES


CITY OF BLOOMINGTON MINNESOTA
1700 W 98TH ST.
BLOOMINGTON MN 55431
PHONE (952) 563-8700

ALLIANT ENGINEERING
233 Park Ave S, Ste 300
Minneapolis, MN 55415
612.758.3080 MAIN
612.758.3099 FAX
www.alliant-inc.com


REVISIONS

| DATE | DESCRIPTION | BY |
|---|---|---|
| | | |

I HEREBY CERTIFY THAT THIS PLAN WAS PREPARED BY ME OR UNDER MY DIRECT SUPERVISION AND THAT I AM A DULY LICENSED PROFESSIONAL ENGINEER UNDER THE LAWS OF THE STATE OF MINNESOTA.

THOMAS JENSEN 44247 4/30/14
LIC. # DATE

DRAWN: KAS
CHECKED: TJJ
APPROVED: TJJ

SHEET:
20 OF 82

Drawing name: X:\2012\120092\PlanSheets\120092-existJ.dwg -- Printed: May 16, 2014 - 2:18pm

Drawing name: X:\2012\120092\PlanSheets\120092-existK.dwg -- Printed: May 16, 2014 - 2:19pm

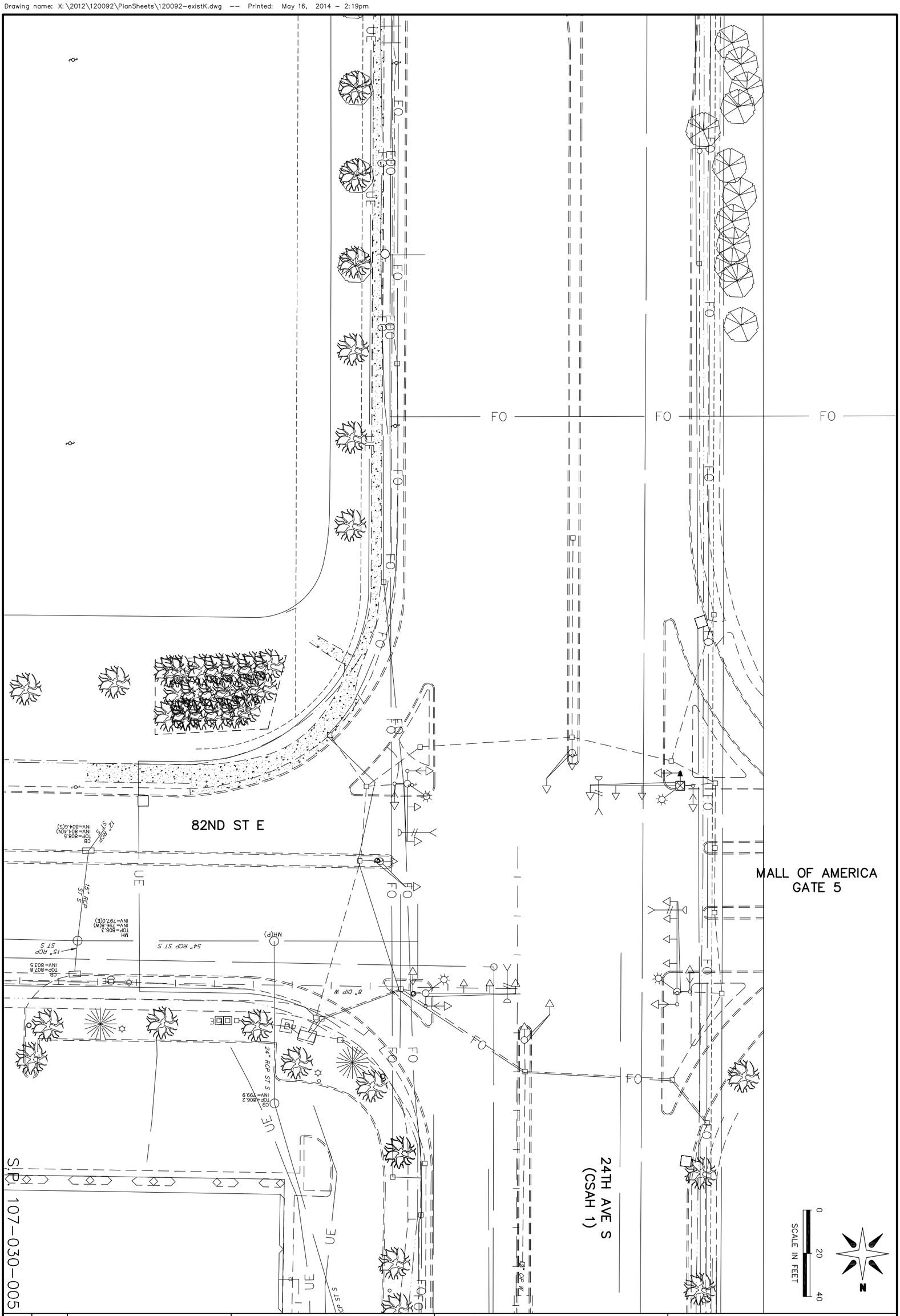


| | |
|---|---|
| SHEET: | 21 OF 82 |
| DRAWN: | KAS |
| CHECKED: | TJJ |
| APPROVED: | TJJ |

I HEREBY CERTIFY THAT THIS PLAN WAS PREPARED BY ME OR UNDER MY DIRECT SUPERVISION AND THAT I AM A DULY LICENSED PROFESSIONAL ENGINEER UNDER THE LAWS OF THE STATE OF MINNESOTA.

THOMAS JENSEN 44247 LIC. # 4/30/14 DATE

REVISIONS

| DATE | DESCRIPTION | BY |
|---|---|---|
| | | |

CITY OF BLOOMINGTON MINNESOTA
1700 W 98TH ST.
BLOOMINGTON MN 55431
PHONE (952) 563-8700

ALLIANT ENGINEERING
233 Park Ave S, Ste 300
Minneapolis, MN 55415
612.758.3080 MAIN
612.758.3099 FAX
www.alliant-inc.com

2013-201 WAY FINDING PROJECT

REVISE SIGNAL SYSTEM K

82ND ST E AND 24TH AVE S (CSAH 1)

EXISTING TOPOGRAPHY AND INPLACE UTILITIES

# NOTES & GUIDELINES

## GENERAL INFORMATION:

1. THE CONTRACTOR SHALL FURNISH, INSTALL AND MAINTAIN ALL TRAFFIC CONTROL DEVICES NEEDED IN THIS PLAN UNLESS OTHERWISE NOTED.
2. FIELD CONDITIONS MAY REQUIRE MODIFICATIONS TO LAYOUTS AS DEEMED NECESSARY BY THE ENGINEER.
3. ALL DISTANCES ARE APPROXIMATE.
4. THE CONTRACTOR IS RESPONSIBLE FOR PROTECTING ANY WORK AREAS NEAR TRAFFIC IN ACCORDANCE WITH THE MNMUTCD.
5. AN ANNUAL FALL REVIEW OF ALL TRAFFIC CONTROLS WILL BE MADE TO PREPARE FOR WINTER MAINTENANCE OF THE PROJECT. THIS MAY INCLUDE ADJUSTMENTS OR EXCHANGE OF ONE TRAFFIC CONTROL DEVICE FOR ANOTHER. READJUSTMENTS MAY AGAIN BE REQUIRED IN THE SPRING.
6. THIS PLAN IDENTIFIES ANTICIPATED TRAFFIC CONTROL ZONE LAYOUTS AND IS NOT ALL INCLUSIVE. THERE WILL BE ADDITIONAL TRAFFIC CONTROL NEEDED THAT IS NOT IDENTIFIED ON THE PLAN (CONSIDERED INCIDENTAL). ALL TRAFFIC CONTROL DEVICES, SIGNING, AND SPACING SHALL CONFORM TO THE MOST RECENT EDITION OF THE "MINNESOTA MANUAL ON UNIFORM TRAFFIC CONTROL DEVICES" (MNMUTCD) INCLUDING "FIELD MANUAL FOR TEMPORARY TRAFFIC CONTROL ZONE LAYOUTS".
7. ALL TYPE III BARRICADES SHALL BE REFLECTIVE ON BOTH SIDES.
8. ALL SIGNS SHALL BE DESIGNED FOR APPROPRIATE DESIGNATED APPROACH SPEED.
9. SPECIAL SIGN PANEL DESIGNS SHALL BE APPROVED BY THE ENGINEER PRIOR TO MANUFACTURE.
10. THE CONTRACTOR SHALL BE RESPONSIBLE FOR MAINTENANCE OF ALL SIGNS, INCLUDING SIGNING AT RAMPS AND INTERSECTIONS AND ANY ADDITIONAL SPECIAL SIGNS PLACED DURING PROJECT.
11. ACCESS SHALL BE MAINTAINED TO ALL PROPERTIES AT ALL TIMES.
12. A MINIMUM OF ONE ADEQUATE PEDESTRIAN TRAVEL WAY (BEING ADA COMPLIANT) MUST BE MAINTAINED AT ALL TIMES.
13. APPROPRIATE TRAFFIC DIVISIONS SHALL BE NOTIFIED OF ANY SETUPS, TAKE-DOWNS, OR DEVIATIONS OF TRAFFIC CONTROL THAT AFFECT SIGNAL SYSTEMS ALONG AND/OR IN THE PROJECT AREA. BLOOMINGTON TRAFFIC DIVISION: 952-563-4914
14. THE CONTRACTOR SHOULD BE ABLE TO PERFORM ALL WORK UTILIZING TRAFFIC CONTROL ZONE LAYOUTS DEPICTED IN THE "FIELD MANUAL FOR TEMPORARY TRAFFIC CONTROL ZONE LAYOUTS". THE CONTRACTOR MAY REQUEST LONGER TERM TRAFFIC CONTROL DURATIONS BY SUBMITTING TRAFFIC CONTROL PLANS FOR APPROVAL BY THE ENGINEER.

## SIGNING:

1. ALL TRAFFIC CONTROL DEVICES, INCLUDING OVERHEAD SIGNS ON ROADS OPEN TO TRAFFIC THAT ARE NOT CONSISTANT WITH TRAFFIC OPERATION SHALL BE COVERED, REMOVED OR REVISED AS DIRECTED BY THE ENGINEER (INCIDENTAL).
2. WHEN SIGNS ARE INSTALLED, THEY SHALL BE MOUNTED ON POSTS DRIVEN INTO THE GROUND AT THE PROPER HEIGHT AND LATERAL OFFSET AS DETAILED IN THE MNMUTCD. IF THIS IS NOT POSSIBLE THEY WILL BE MOUNTED ON PORTABLE SUPPORTS AS APPROVED BY THE ENGINEER. WHEN THE SIGNS ARE REMOVED THE SIGN POSTS SHALL ALSO BE REMOVED AS SOON AS POSSIBLE.
3. THE CONTRACTOR SHALL BE RESPONSIBLE FOR ANY EXTRA SIGNING NEEDED TO FACILITATE TRAFFIC SWITCHES OR FOR TRANSITIONING TRAFFIC FROM ONE STAGE TO ANOTHER.
4. ALL ORANGE WARNING AND ORANGE GUIDE SIGNS SHALL BE FABRICATED WITH SIGN SHEETING MATERIAL AS LISTED ON THE MNDOT APPROVED PRODUCT LIST FOR "SHEETING FOR RIGID TEMPORARY WORK ZONE SIGNS".
5. LONGITUDINAL DROPOFFS SHALL BE SIGNED AS SHOWN IN THE "TEMPORARY TRAFFIC CONTROL ZONE LAYOUTS" FIELD MANUAL UNLESS OTHERWISE SPECIFIED IN THESE PLANS.
6. THE CONTRACTOR SHALL COORDINATE THE INSTALLATION OF THE FINAL SIGNS TO ASSURE THAT THE FINAL SIGNS ARE INSTALLED AS NEEDED, OR PROVIDE TEMPORARY SIGNING AT THEIR EXPENSE UNTIL THE FINAL SIGNING IS INSTALLED.
7. ALL SALVAGED SIGNS SHALL BE RETURNED TO THE CITY OF BLOOMINGTON (INCIDENTAL).
8. "ROAD WORK AHEAD" SIGNS REQUIRED ON ALL SIDE-STREETS.

## PAVEMENT MARKING:

1. OBLITERATE ANY CONFLICTING PAVEMENT MARKINGS AS DIRECTED BY THE ENGINEER (INCIDENTAL).
2. PAINT, POLYMER LANE TAPE AND/OR TRPM'S ARE ACCEPTABLE TEMPORARY STRIPING ALTERNATIVES ACCORDING TO ACTUAL CONDITIONS ENCOUNTERED AS DIRECTED BY THE ENGINEER. GENERALLY, ONLY PAINT WILL BE USED BEFORE MAY 1ST OR WHEN THE OTHER MANUFACTURERS' SPECIFICATIONS CAN NOT BE MET.
3. TRPM'S (TEMPORARY RAISED PAVEMENT MARKERS) SHOULD BE USED TO SUPPLEMENT THE LONG TERM (MORE THAN 3 DAYS) EDGELINES ON ALL TRANSITION AREAS WHEN THE CONDITIONS ARE WITHIN THE MANUFACTURERS' SPECIFICATIONS.
4. THE CONTRACTOR SHALL BE RESPONSIBLE FOR THE LOCATION AND INSTALLATION OF TEMPORARY AND FINAL STRIPING. CITY TRAFFIC PERSONNEL WILL ASSIST IN THE SPOTTING OF TRANSITION AREAS, GORES AND TAPERS.

## BARRIER & DELINEATION:

1. TOP MOUNTED BARRIER DELINEATORS, IF REQUIRED, WILL HAVE A MINIMUM OF 24 SQ. IN. OF REFLECTIVE SURFACE AREA AND BE PLACED AT 30' SPACES ON TOP OF THE BARRIER WHEN THE BARRIER IS WITHIN 10' OF TRAFFIC UNLESS OTHERWISE NOTED OR AS DIRECTED BY THE ENGINEER. IF THE TRAFFIC ENGINEER REQUIRES SIDE MOUNTED BARRIER DELINEATORS, THEY WILL HAVE A MINIMUM OF 12 SQ. IN. OF REFLECTIVE SURFACE AREA AND BE PLACED AT 30' SPACES. IF SMALLER APPROVED BARRIER DELINEATOR IS USED IT SHALL BE AT ONE HALF THE SPACING AND ONE HALF THE BID PRICE.

S.P. 107-030-005

2013-201 WAY FINDING PROJECT

TRAFFIC CONTROL NOTES

CITY OF BLOOMINGTON MINNESOTA
1700 W 98TH ST.
BLOOMINGTON MN 55431
PHONE (952) 563-8700

ALLIANT ENGINEERING
233 Park Ave S. Ste 300
Minneapolis, MN 55415
612.758.3080 MAIN
612.758.3099 FAX
www.alliant-inc.com

REVISIONS

| DATE | DESCRIPTION | BY |
|---|---|---|
| | | |

I HEREBY CERTIFY THAT THIS PLAN WAS PREPARED BY ME OR UNDER MY DIRECT SUPERVISION AND THAT I AM A DULY LICENSED PROFESSIONAL ENGINEER UNDER THE LAWS OF THE STATE OF MINNESOTA.

THOMAS JENSEN 44247 4/30/14
LIC. # DATE

DRAWN: KAS
CHECKED: TJJ
APPROVED: TJJ

SHEET:
22 OF 82

Drawing name: X:\2012\120092\PlanSheets\120092-sd01.dwg -- Printed: May 16, 2014 - 2:21pm

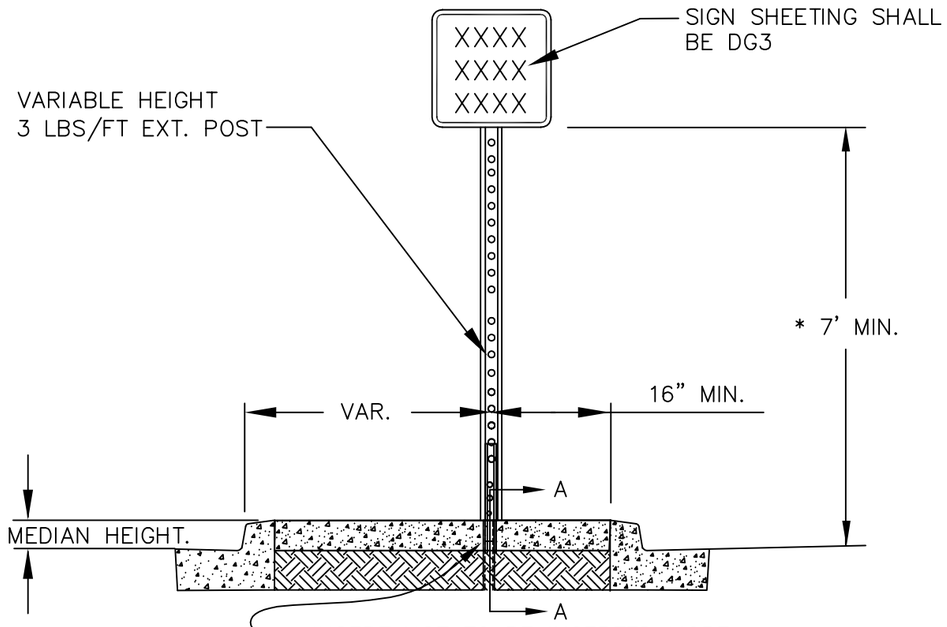


* 4' MIN. HEIGHT FOR SECONDARY SIGN

## ISLAND MOUNT BREAK-AWAY SIGN TYPICAL INSTALLATION

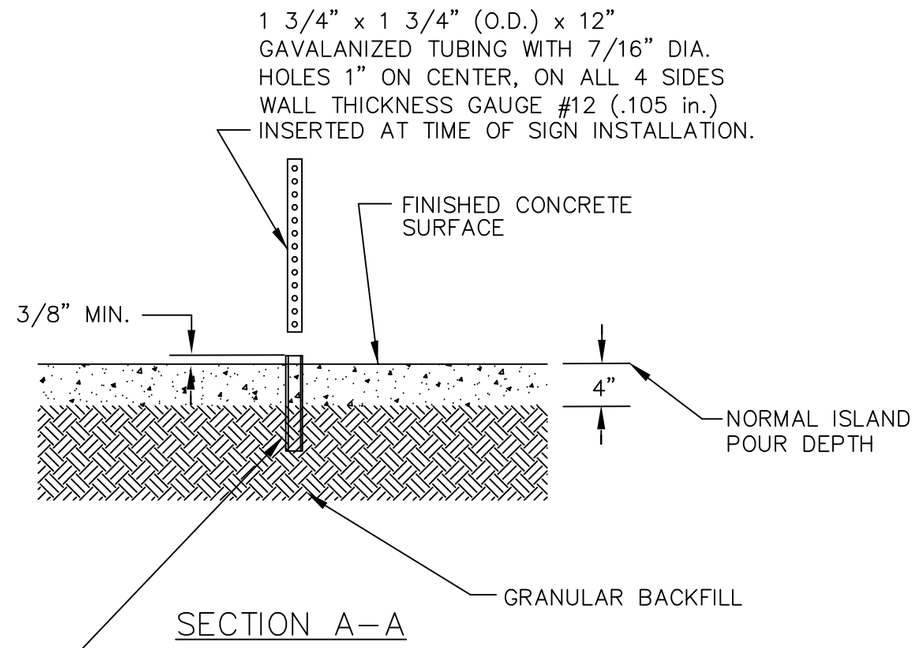


## SECTION A-A

INSTALL 2" x 2" (O.D.) x 12" SOLID WALL GALVANIZED SQUARE TUBING BEFORE CONCRETE POUR. EMBED IN GROUND SO THAT 3/8" OF TUBE WILL BE ABOVE FINISHED CONCRETE SURFACE. RE-PLUMB AT TIME OF POUR.

NOTE:
ALL TRAFFIC CONTROL DEVICES, INSTALLATION AND SIGNING SHALL CONFORM TO THE LATEST VERSION OF THE MINNESOTA MANUAL ON UNIFORM TRAFFIC CONTROL DEVICES (MMUTCD).

S.P. 107-030-005

2013-201 WAY FINDING PROJECT

STANDARD DETAIL
STATIC SIGN MOUNT - CONCRETE

CITY OF BLOOMINGTON MINNESOTA
1700 W 98TH ST.
BLOOMINGTON MN 55431
PHONE (952) 563-8700

ALLIANT ENGINEERING
233 Park Ave S, Ste 300
Minneapolis, MN 55415
612.758.3080 MAIN
612.758.3099 FAX
www.alliant-inc.com

REVISIONS

| DATE | DESCRIPTION | BY |
|---|---|---|
| | | |

I HEREBY CERTIFY THAT THIS PLAN WAS PREPARED BY ME OR UNDER MY DIRECT SUPERVISION AND THAT I AM A DULY LICENSED PROFESSIONAL ENGINEER UNDER THE LAWS OF THE STATE OF MINNESOTA.

THOMAS JENSEN 44247 4/30/14
LIC. # DATE

DRAWN: KAS
CHECKED: TJJ
APPROVED: TJJ

SHEET: 23 OF 82

Drawing name: X:\2012\120092\PlanSheets\120092-sd02.dwg -- Printed: May 16, 2014 - 2:21pm

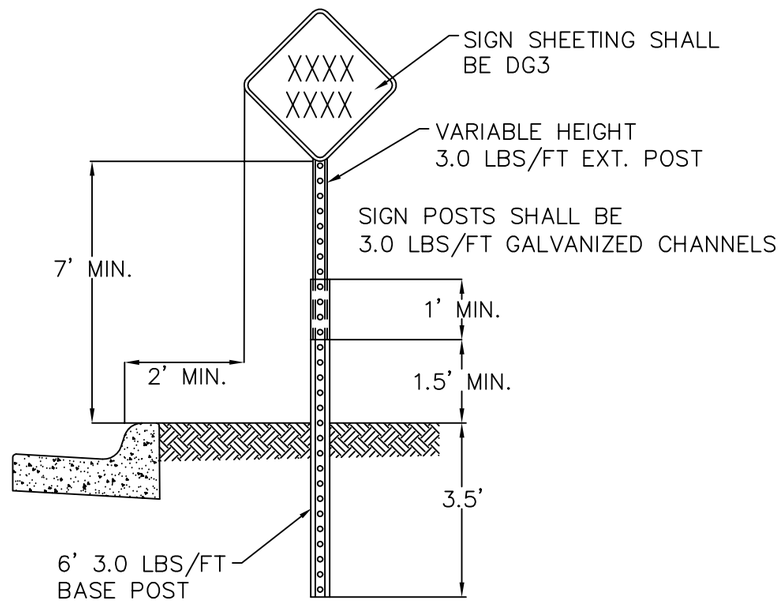


NOTE:
ALL TRAFFIC CONTROL DEVICES, INSTALLATION AND SIGNING SHALL CONFORM TO THE LATEST VERSION OF THE MINNESOTA MANUAL ON UNIFORM TRAFFIC CONTROL DEVICES (MMUTCD).

## GROUND POST-MOUNTED SIGN TYPICAL INSTALLATION

S.P. 107-030-005

2013-201 WAY FINDING PROJECT

STANDARD DETAIL
STATIC SIGN MOUNT - GROUND

CITY OF BLOOMINGTON MINNESOTA
1700 W 98TH ST.
BLOOMINGTON MN 55431
PHONE (952) 563-8700

ALLIANT ENGINEERING
233 Park Ave S, Ste 300
Minneapolis, MN 55415
612.758.3080 MAIN
612.758.3099 FAX
www.alliant-inc.com

REVISIONS

| DATE | DESCRIPTION | BY |
|---|---|---|
| | | |

I HEREBY CERTIFY THAT THIS PLAN WAS PREPARED BY ME OR UNDER MY DIRECT SUPERVISION AND THAT I AM A DULY LICENSED PROFESSIONAL ENGINEER UNDER THE LAWS OF THE STATE OF MINNESOTA.

THOMAS JENSEN 44247 4/30/14
LIC. # DATE

DRAWN: KAS
CHECKED: TJJ
APPROVED: TJJ

SHEET:
24 OF 82

Drawing name: X:\2012\120092\PlanSheets\120092-sd03.dwg -- Printed: May 16, 2014 - 2:22pm

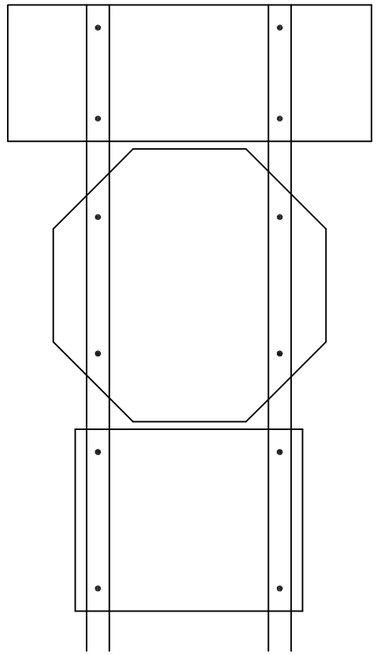

R6–1, R1–1 & (R6–3 OR R6–3a)
MOUNTING

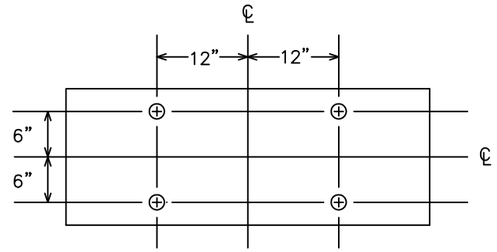


PUNCHING FOR R6–1(54"x18")

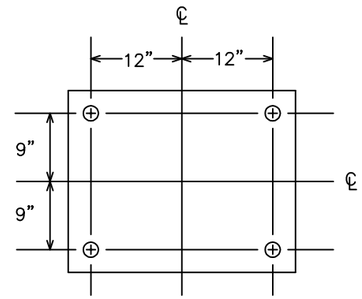


PUNCHING FOR R6–3 OR R6–3a(30"x24")

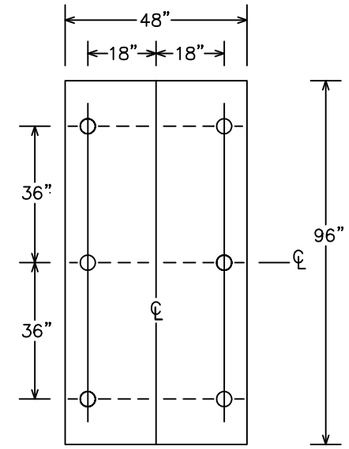


PUNCHING FOR R2–4b
SPEED LIMIT

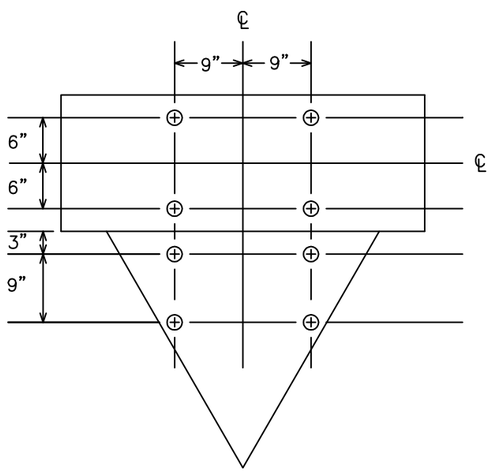


PUNCHING FOR R6–1(54"x18")
& R1–2(36"x36"x36")

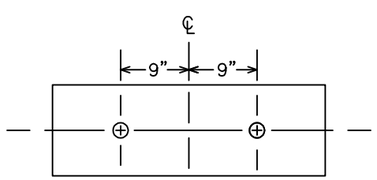


PUNCHING FOR R6–1(36"x12")

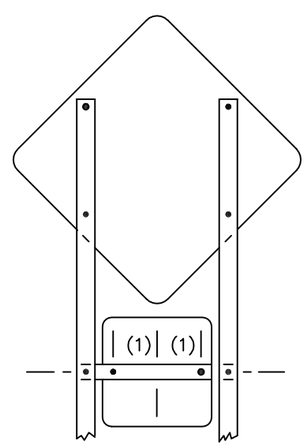


WARNING SIGN [30"x30 OR 48"X48"] AND
WARNING PLAQUE [18"x18" OR 30"x30"]
PUNCHING AND MOUNTING

(1) 6" FOR WARNING PLAQUE (18"x18")
12" FOR WARNING PLAQUE (30"x30")

S.P. 107–030–005

2013–201 WAY FINDING PROJECT

STANDARD DETAIL
PUNCHING AND MOUNTING


CITY OF BLOOMINGTON MINNESOTA
1700 W 98TH ST.
BLOOMINGTON MN 55431
PHONE (952) 563-8700

ALLIANT ENGINEERING
233 Park Ave S, Ste 300
Minneapolis, MN 55415
612.758.3080 MAIN
612.758.3099 FAX
www.alliant-inc.com


REVISIONS

| DATE | DESCRIPTION | BY |
|---|---|---|
| | | |

I HEREBY CERTIFY THAT THIS PLAN WAS PREPARED BY ME OR UNDER MY DIRECT SUPERVISION AND THAT I AM A DULY LICENSED PROFESSIONAL ENGINEER UNDER THE LAWS OF THE STATE OF MINNESOTA.

THOMAS JENSEN 44247 4/30/14
LIC. # DATE

DRAWN: KAS
CHECKED: TJJ
APPROVED: TJJ

SHEET:
25 OF 82

Drawing name: X:\2012\120092\PlanSheets\120092-sd04.dwg -- Printed: May 16, 2014 - 2:22pm

| A | SIGN PANELS TYPE D | | | | | | | | | | |
|---|---|---|---|---|---|---|---|---|---|---|---|
| SIGN NO | QTY | POSTS | | | | MTG HT (1) (2) | PANEL | | | PANEL LEGEND | REMARKS |
| | | NO. & TYPE | KNEE BRACES QTY | LENGTH | SPACING | | SIZE | AREA | TOTAL AREA | | |
| | | | | FEET | INCH | FEET | FEET | SQ FT | SQ FT | | |
| D–1 | 4 | 2–U | 1 | 15 | 24 | 7 | 36 x 48 | 12.0 | 48.0 | SOUTH MINNESOTA 77 | (A) MOUNT TO EXISTING LIGHT POLE<br>(B) GROUND MOUNT |
| D–2 | 1 | 2–U | 1 | 13 | 24 | 7 | 36 x 36 | 9.0 | 9.0 | Mall of America | GROUND MOUNTED |
| D–3 | 2 | 2–U | 1 | 13 | 24 | 7 | 36 x 36 | 9.0 | 18.0 | Mall of America | GROUND MOUNTED |
| D–4 | 1 | | | | | | 30 x 36 | 7.5 | 7.5 | PARK & RIDE | GROUND MOUNTED |
| D–5 | 1 | 2–U | 1 | 13 | 24 | 7 | 36 x 36 | 9.0 | 9.0 | Mall of America | GROUND MOUNTED |
| D–6 | 1 | | | | | | 30 x 36 | 7.5 | 7.5 | PARK & RIDE | GROUND MOUNTED |
| D–7 | 2 | – | – | – | – | – | 78 x 48 | 26.0 | 52.0 | NORTH INTERSTATE 494 MINNESOTA 77 | MAST ARM MOUNTED |
| D–8 | 1 | – | – | – | – | – | 36 x 54 | 13.50 | 13.50 | EAST INTERSTATE 494 | MAST ARM MOUNTED |
| D–9 | 1 | – | – | – | – | – | 36 x 42 | 10.50 | 10.50 | INTERSTATE 494 | MAST ARM MOUNTED |
| D–10 | 1 | – | – | – | – | – | 48 x 54 | 18.0 | 18.0 | National Wildlife Refuge | MAST ARM MOUNTED |

GENERAL NOTES:
1. POST LENGTHS ARE APPROXIMATE AND INCLUDE EMBEDMENT, BUT DO NOT INCLUDE ADDITIONAL LENGTH REQUIRED FOR SPLICE.
2. SEE SHEETS 23 – 25 FOR STRUCTURAL DETAILS.
3. SEE STANDARD SIGNS MANUAL FOR TYPE D STRINGER AND PANEL JOINT DETAILS.

SPECIFIC NOTES:
(1) MOUNTING HEIGHT MINIMUM. SEE SHEETS 23–24 FOR TYPICAL MOUNTING.
(2) FOR PUNCHING AND MOUNTING DETAILS SEE SHEET 25.

S.P. 107–030–005

2013–201 WAY FINDING PROJECT

SIGNING TABULATION

SIGN PANELS TYPE D

CITY OF BLOOMINGTON MINNESOTA
1700 W 98TH ST.
BLOOMINGTON MN 55431
PHONE (952) 563-8700

ALLIANT ENGINEERING
233 Park Ave S, Ste 300
Minneapolis, MN 55415
612.758.3080 MAIN
612.758.3099 FAX
www.alliant-inc.com

REVISIONS

| DATE | DESCRIPTION | BY |
|---|---|---|
| | | |

I HEREBY CERTIFY THAT THIS PLAN WAS PREPARED BY ME OR UNDER MY DIRECT SUPERVISION AND THAT I AM A DULY LICENSED PROFESSIONAL ENGINEER UNDER THE LAWS OF THE STATE OF MINNESOTA.

THOMAS JENSEN 44247 4/30/14
LIC. # DATE

DRAWN: KAS
CHECKED: TJJ
APPROVED: TJJ

SHEET: 26 OF 82

Drawing name: X:\2012\120092\PlanSheets\120092-tab01.dwg -- Printed: May 16, 2014 - 2:54pm

## B — REMOVE SIGN TYPE D

| SIGN NO | QTY | POSTS NO. & TYPE | POSTS KNEE BRACES QTY | POSTS LENGTH FEET | POSTS SPACING INCH | MTG HT (1) (2) FEET | PANEL SIZE FEET | PANEL AREA SQ FT | PANEL TOTAL AREA SQ FT | PANEL LEGEND | REMARKS |
|---|---|---|---|---|---|---|---|---|---|---|---|
| D-200 | 1 | | | | | | | | | MALL OF AMERICA<br>Additional Free Pkg. ⇧ | |
| | | | | | | | | | | | |

## C — REMOVE SIGN PANEL TYPE SPECIAL

| SIGN NO | QTY | LOCATION | PANEL LEGEND | REMARKS |
|---|---|---|---|---|
| S-201 | 1 | EB AMERICAN BLVD AT INTERSECTION WITH 24TH AVE S | LED<br>ALTERNATE ROUTE WHEN ARROW ON | MAST ARM MOUNTED |
| S-202 | 1 | NB AMERICAN BLVD AT INTERSECTION WITH 24TH AVE S | LED<br>ALTERNATE ROUTE WHEN ARROW ON | MAST ARM MOUNTED |
| S-203 | 1 | SB AMERICAN BLVD AT INTERSECTION WITH 24TH AVE S | LED<br>ALTERNATE ROUTE WHEN ARROW ON | MAST ARM MOUNTED |
| S-204 | 1 | EB AMERICAN BLVD AT INTERSECTION WITH 34TH AVE S | LED<br>ALTERNATE ROUTE WHEN ARROW ON | MAST ARM MOUNTED |

S.P. 107-030-005

2013-201 WAY FINDING PROJECT

SIGNING TABULATION

SIGN PANELS TYPE D

SALVAGED, REINSTALLED AND REMOVALS

CITY OF BLOOMINGTON MINNESOTA
1700 W 98TH ST.
BLOOMINGTON MN 55431
PHONE (952) 563-8700

ALLIANT ENGINEERING
233 Park Ave S, Ste 300
Minneapolis, MN 55415
612.758.3080 MAIN
612.758.3099 FAX
www.alliant-inc.com

REVISIONS

| DATE | DESCRIPTION | BY |
|---|---|---|
| | | |

I HEREBY CERTIFY THAT THIS PLAN WAS PREPARED BY ME OR UNDER MY DIRECT SUPERVISION AND THAT I AM A DULY LICENSED PROFESSIONAL ENGINEER UNDER THE LAWS OF THE STATE OF MINNESOTA.

THOMAS JENSEN 44247 4/30/14
LIC. # DATE

DRAWN: KAS
CHECKED: TJJ
APPROVED: TJJ

SHEET: 27 OF 82

Drawing name: X:\2012\120092\PlanSheets\120092-tab02.dwg -- Printed: May 16, 2014 - 2:57pm

Drawing name: X:\2012\120092\PlanSheets\120092-sgn01.dwg -- Printed: May 16, 2014 - 2:24pm

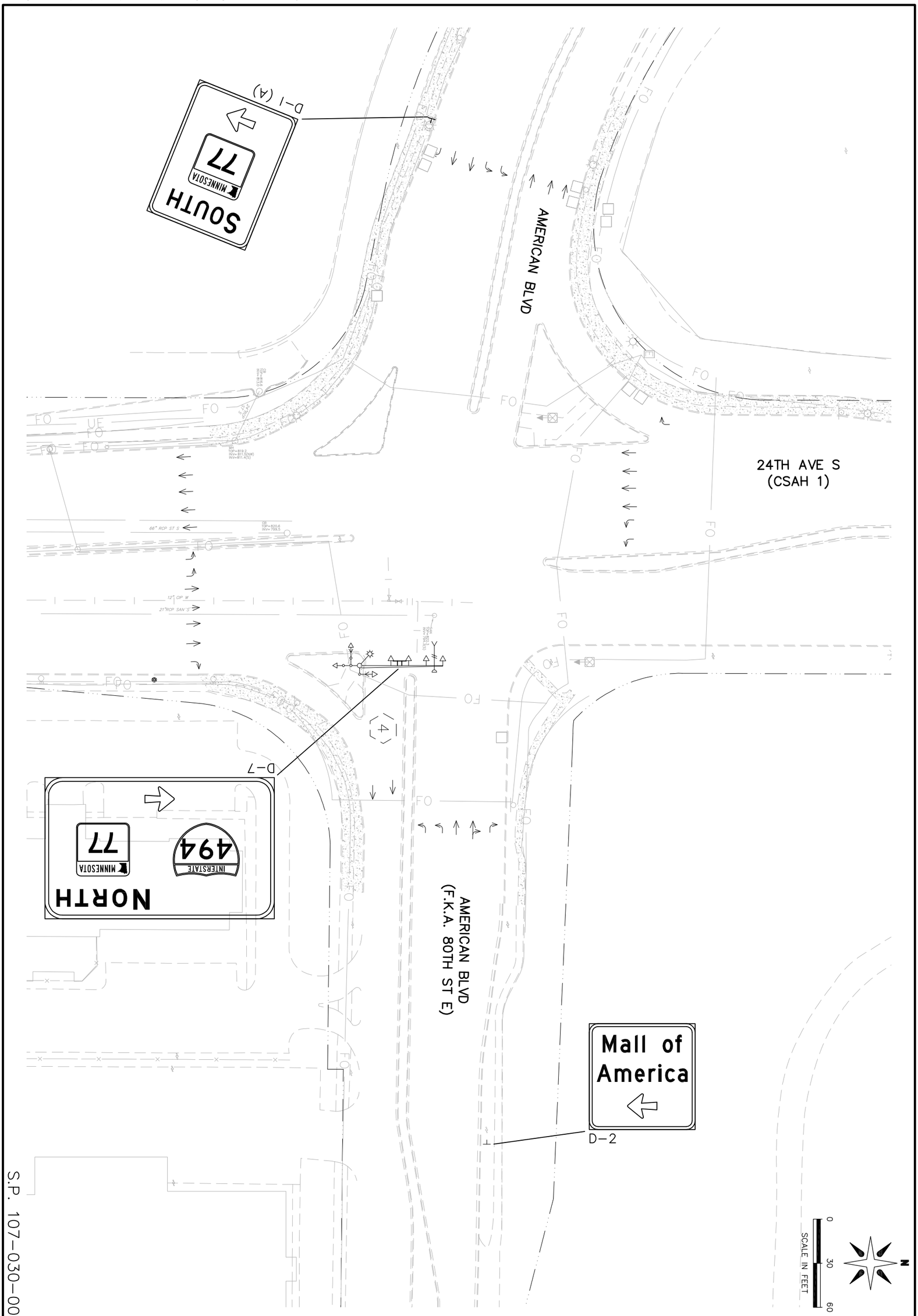


S.P. 107-030-005

SHEET: 28 OF 82

DRAWN: KAS
CHECKED: TJJ
APPROVED: TJJ

I HEREBY CERTIFY THAT THIS PLAN WAS PREPARED BY ME OR UNDER MY DIRECT SUPERVISION AND THAT I AM A DULY LICENSED PROFESSIONAL ENGINEER UNDER THE LAWS OF THE STATE OF MINNESOTA.

THOMAS JENSEN — 44247 LIC. # — 4/30/14 DATE

REVISIONS

| DATE | DESCRIPTION | BY |
|---|---|---|
| | | |

CITY OF BLOOMINGTON MINNESOTA
1700 W 98TH ST.
BLOOMINGTON MN 55431
PHONE (952) 563-8700

ALLIANT ENGINEERING
233 Park Ave S, Ste 300
Minneapolis, MN 55415
612.758.3080 MAIN
612.758.3099 FAX
www.alliant-inc.com

2013-201 WAY FINDING PROJECT

SIGNING PLAN

AMERICAN BLVD AND 24TH AVE S (CSAH 1)

Drawing name: X:\2012\120092\PlanSheets\120092-sgn02.dwg -- Printed: May 16, 2014 - 2:26pm

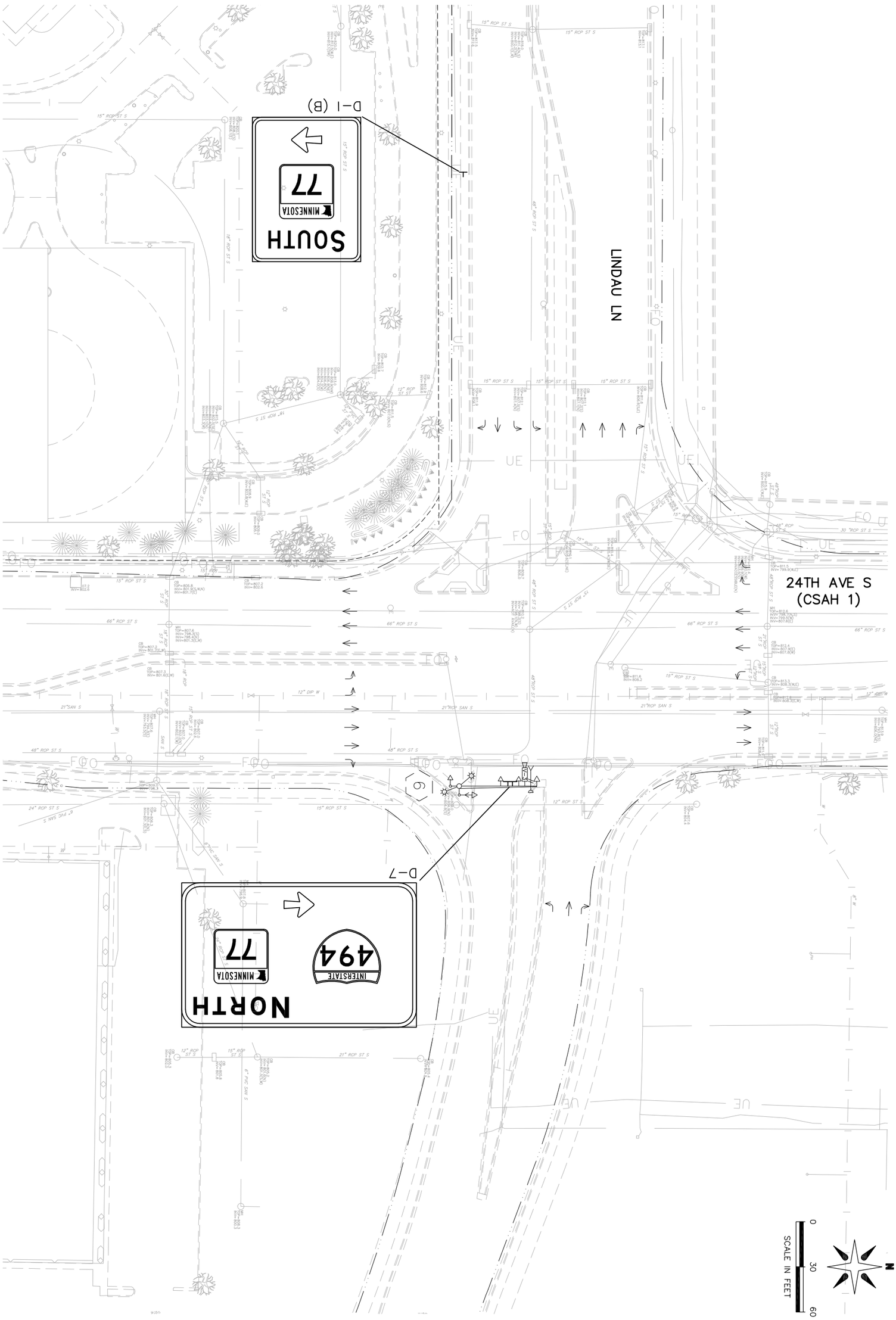


S.P. 107-030-005

SHEET: 29 OF 82

DRAWN: KAS
CHECKED: TJJ
APPROVED: TJJ

I HEREBY CERTIFY THAT THIS PLAN WAS PREPARED BY ME OR UNDER MY DIRECT SUPERVISION AND THAT I AM A DULY LICENSED PROFESSIONAL ENGINEER UNDER THE LAWS OF THE STATE OF MINNESOTA.

THOMAS JENSEN 44247 4/30/14
LIC. # DATE

REVISIONS

| DATE | DESCRIPTION | BY |
|---|---|---|
| | | |

CITY OF BLOOMINGTON MINNESOTA
1700 W 98TH ST.
BLOOMINGTON MN 55431
PHONE (952) 563-8700

ALLIANT ENGINEERING
233 Park Ave S, Ste 300
Minneapolis, MN 55415
612.758.3080 MAIN
612.758.3099 FAX
www.alliant-inc.com

2013-201 WAY FINDING PROJECT

SIGNING PLAN

LINDAU LN AND 24TH AVE S

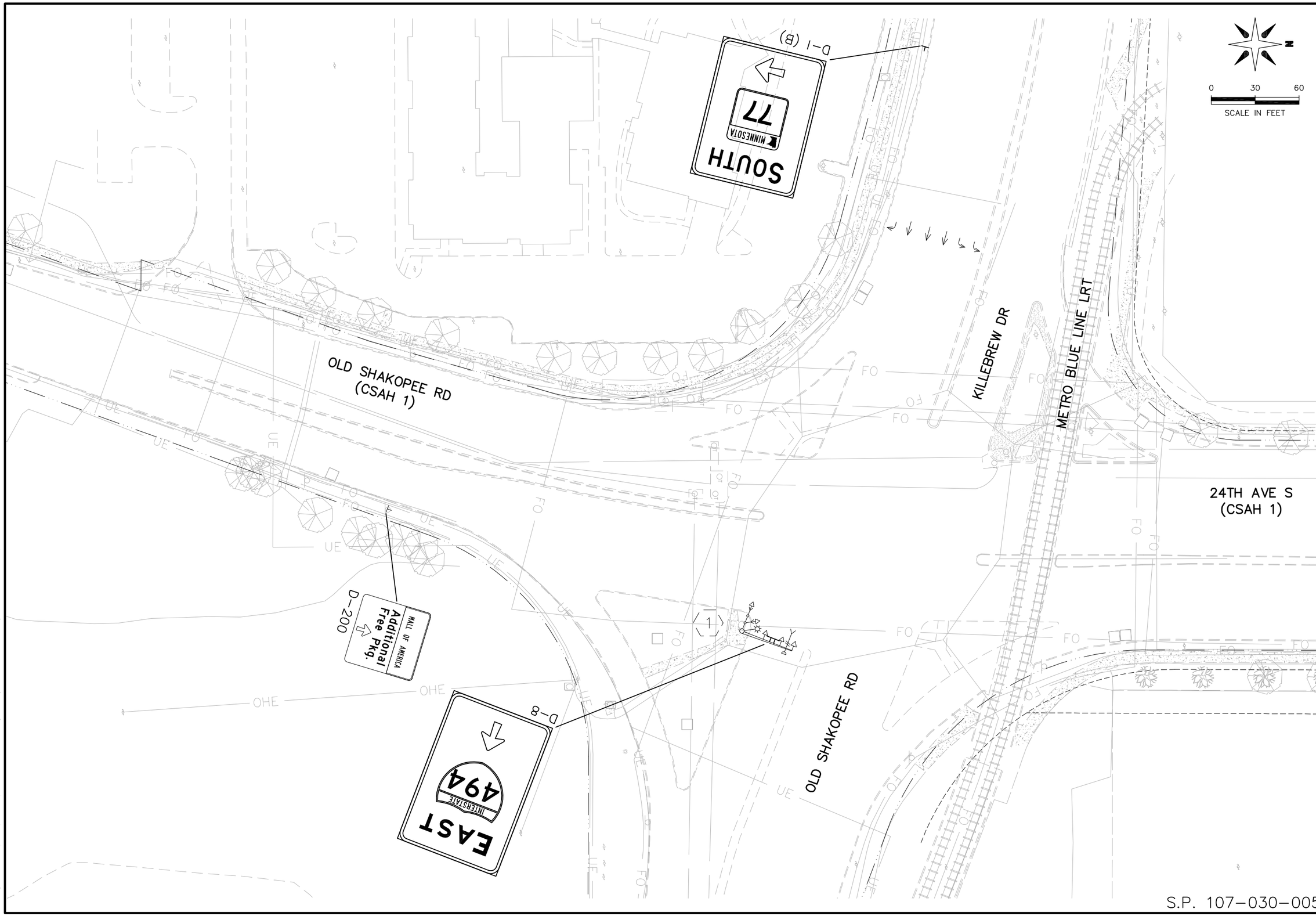


# 2013-201 WAY FINDING PROJECT

## SIGNING PLAN

OLD SHAKOPEE RD AND 24TH AVE S (CSAH 1)


CITY OF BLOOMINGTON MINNESOTA
1700 W 98TH ST.
BLOOMINGTON MN 55431
PHONE (952) 563-8700

ALLIANT ENGINEERING
233 Park Ave S, Ste 300
Minneapolis, MN 55415
612.758.3080 MAIN
612.758.3099 FAX
www.alliant-inc.com


REVISIONS

| DATE | DESCRIPTION | BY |
|---|---|---|
| | | |

I HEREBY CERTIFY THAT THIS PLAN WAS PREPARED BY ME OR UNDER MY DIRECT SUPERVISION AND THAT I AM A DULY LICENSED PROFESSIONAL ENGINEER UNDER THE LAWS OF THE STATE OF MINNESOTA.

THOMAS JENSEN 44247 4/30/14
LIC. # DATE

DRAWN: KAS
CHECKED: TJJ
APPROVED: TJJ

SHEET:
30 OF 82

S.P. 107-030-005

Drawing name: X:\2012\120092\PlanSheets\120092-sgn03.dwg -- Printed: May 16, 2014 - 2:28pm

Drawing name: X:\2012\120092\PlanSheets\120092-sgn04.dwg -- Printed: May 16, 2014 - 2:30pm

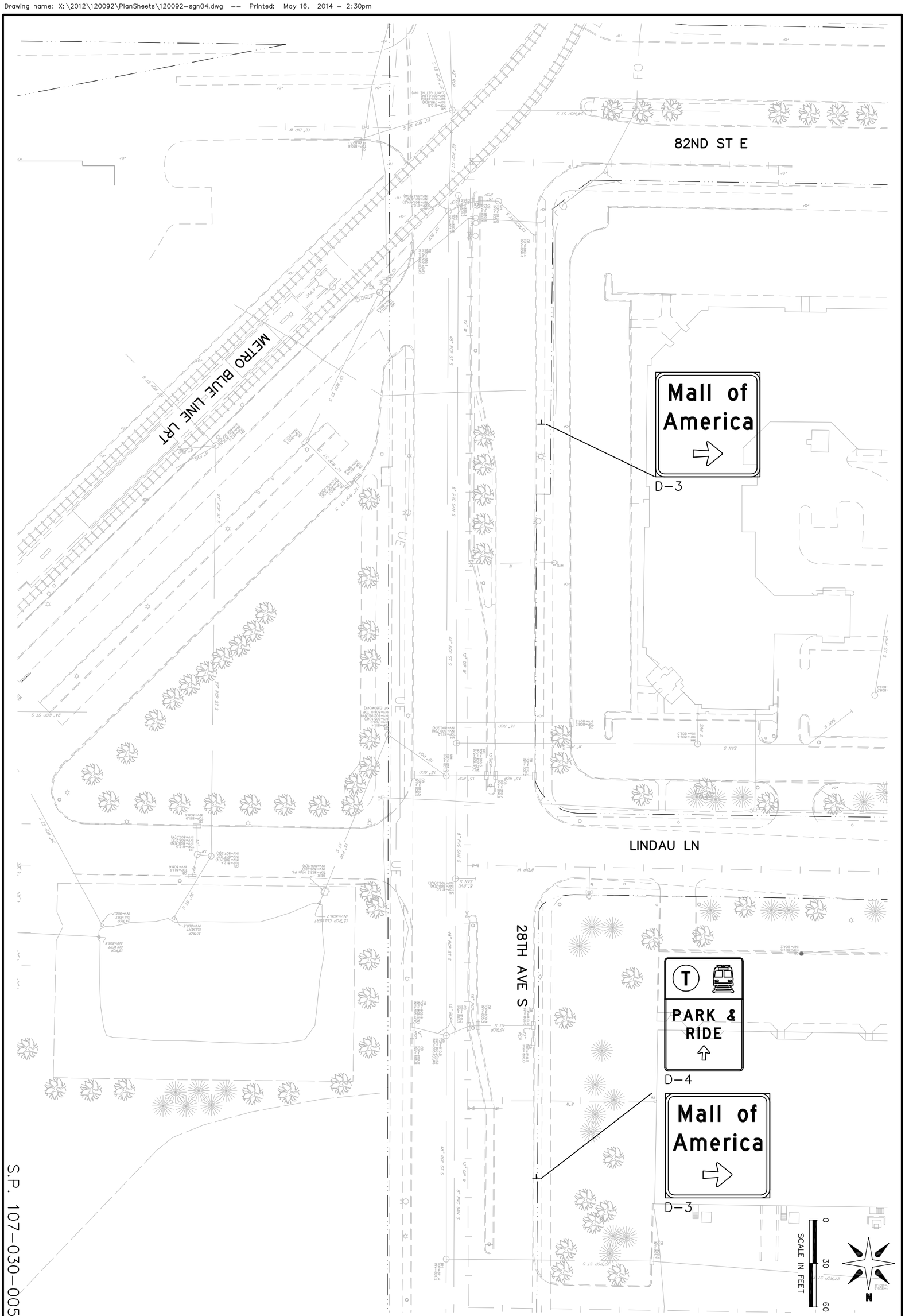


S.P. 107-030-005

SHEET: 31 OF 82

DRAWN: KAS
CHECKED: TJJ
APPROVED: TJJ

I HEREBY CERTIFY THAT THIS PLAN WAS PREPARED BY ME OR UNDER MY DIRECT SUPERVISION AND THAT I AM A DULY LICENSED PROFESSIONAL ENGINEER UNDER THE LAWS OF THE STATE OF MINNESOTA.

THOMAS JENSEN 44247 4/30/14
LIC. # DATE

REVISIONS

| DATE | DESCRIPTION | BY |
|---|---|---|
| | | |

CITY OF BLOOMINGTON MINNESOTA
1700 W 98TH ST.
BLOOMINGTON MN 55431
PHONE (952) 563-8700

ALLIANT ENGINEERING
233 Park Ave S, Ste 300
Minneapolis, MN 55415
612.758.3080 MAIN
612.758.3099 FAX
www.alliant-inc.com

2013-201 WAY FINDING PROJECT

SIGNING PLAN

28TH AVE S, LINDAU LN AND 81ST ST E

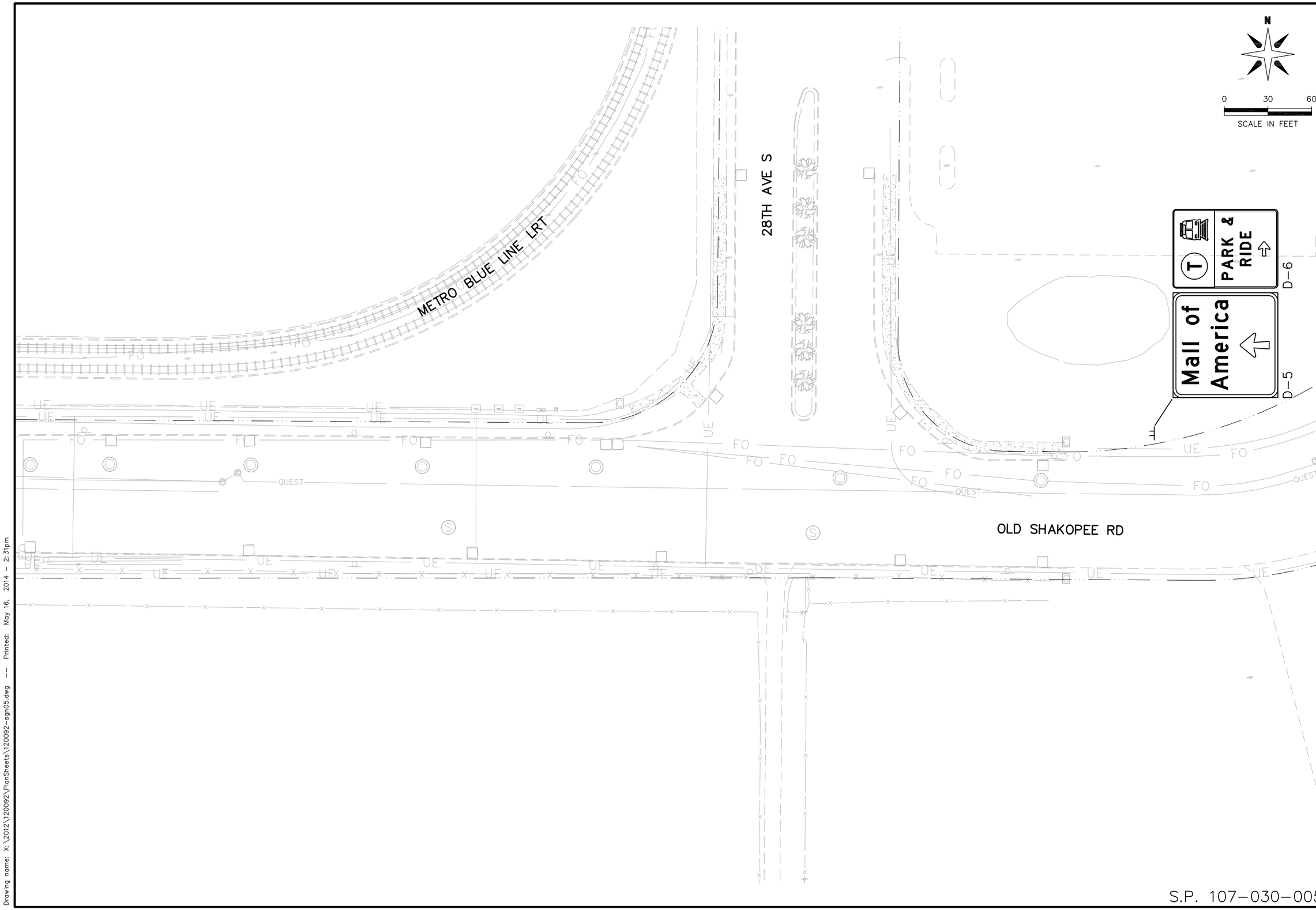


# 2013-201 WAY FINDING PROJECT

## SIGNING PLAN

OLD SHAKOPEE RD AND 28TH AVE S


CITY OF BLOOMINGTON MINNESOTA
1700 W 98TH ST.
BLOOMINGTON MN 55431
PHONE (952) 563-8700

ALLIANT ENGINEERING
233 Park Ave S, Ste 300
Minneapolis, MN 55415
612.758.3080 MAIN
612.758.3099 FAX
www.alliant-inc.com


REVISIONS

| DATE | DESCRIPTION | BY |
|---|---|---|
| | | |

I HEREBY CERTIFY THAT THIS PLAN WAS PREPARED BY ME OR UNDER MY DIRECT SUPERVISION AND THAT I AM A DULY LICENSED PROFESSIONAL ENGINEER UNDER THE LAWS OF THE STATE OF MINNESOTA.

THOMAS JENSEN 44247 4/30/14
LIC. # DATE

DRAWN: KAS
CHECKED: TJJ
APPROVED: TJJ

SHEET:
32 OF 82

S.P. 107-030-005

Drawing name: X:\2012\120092\PlanSheets\120092-sgn05.dwg -- Printed: May 16, 2014 - 2:31pm

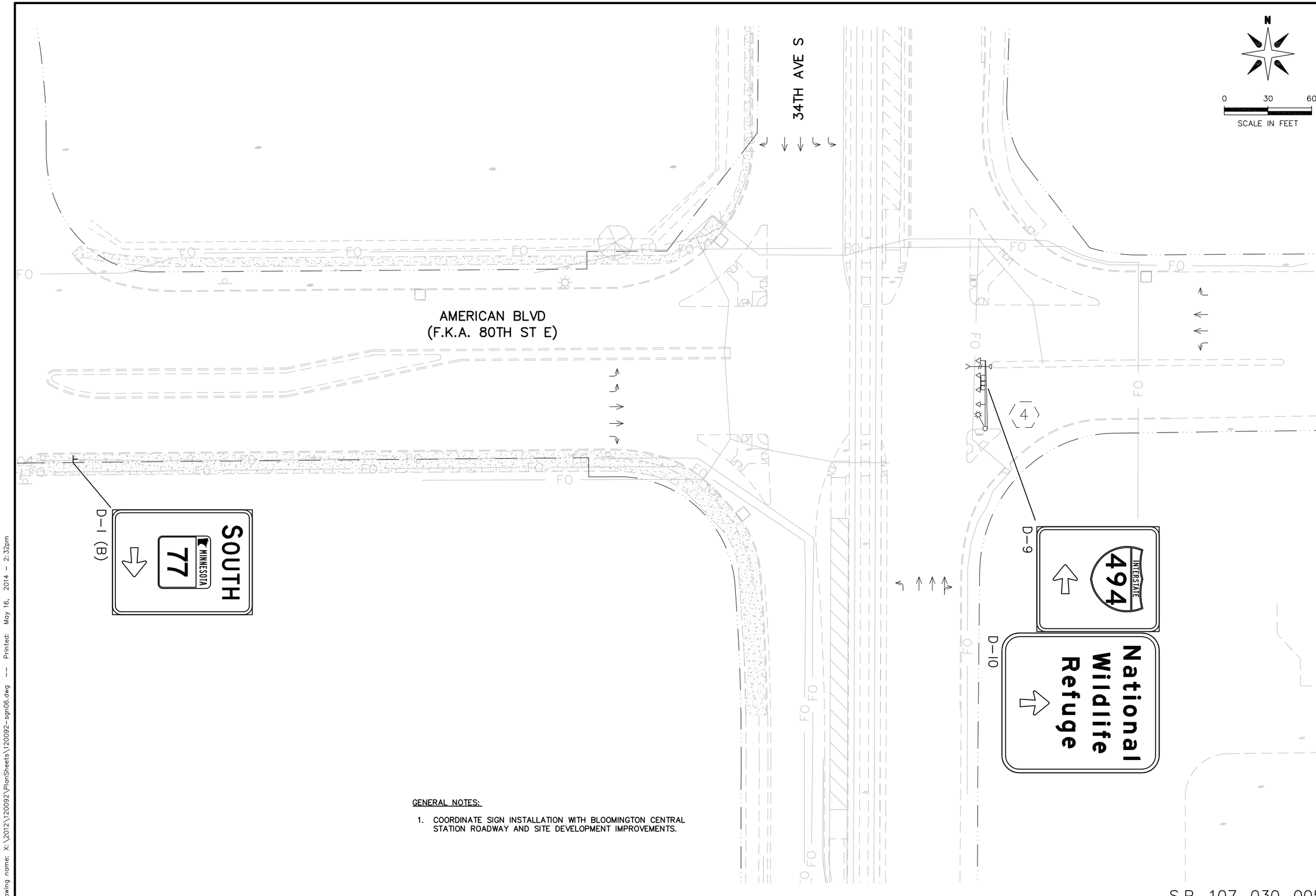


GENERAL NOTES:

1. COORDINATE SIGN INSTALLATION WITH BLOOMINGTON CENTRAL STATION ROADWAY AND SITE DEVELOPMENT IMPROVEMENTS.

S.P. 107-030-005

2013-201 WAY FINDING PROJECT

SIGNING PLAN

AMERICAN BLVD AND 34TH AVE S

CITY OF BLOOMINGTON MINNESOTA
1700 W 98TH ST.
BLOOMINGTON MN 55431
PHONE (952) 563-8700

ALLIANT ENGINEERING
233 Park Ave S, Ste 300
Minneapolis, MN 55415
612.758.3080 MAIN
612.758.3099 FAX
www.alliant-inc.com

REVISIONS

| DATE | DESCRIPTION | BY |
|---|---|---|
| | | |

I HEREBY CERTIFY THAT THIS PLAN WAS PREPARED BY ME OR UNDER MY DIRECT SUPERVISION AND THAT I AM A DULY LICENSED PROFESSIONAL ENGINEER UNDER THE LAWS OF THE STATE OF MINNESOTA.

THOMAS JENSEN 44247 4/30/14
LIC. # DATE

DRAWN: KAS
CHECKED: TJJ
APPROVED: TJJ

SHEET:
33 OF 82

Drawing name: X:\2012\120092\PlanSheets\120092-sgn06.dwg -- Printed: May 16, 2014 - 2:32pm

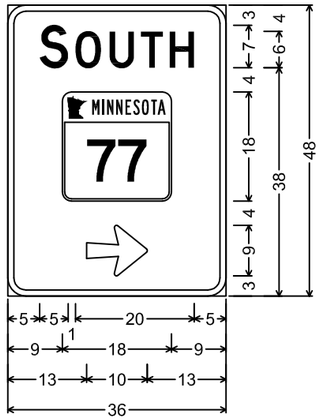


D-1;
3" Radius, 1" Border, White on Green;
[SOUTH] D;
Arrow 3 - 10" 0°;

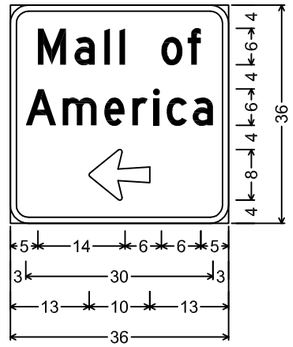


D-2;
3" Radius, 1" Border, White on Green;
[Mall of] D; [America] D;
Arrow 3 - 10" 180°;

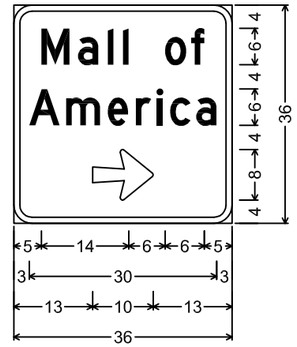


D-3;
3" Radius, 1" Border, White on Green;
[Mall of] D; [America] D;
Arrow 3 - 10" 0°;

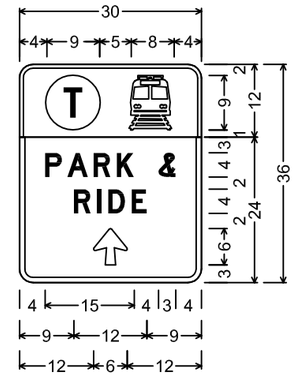


D-4;
2" Radius, 1" Border, White on White;
Metro Transit Symbol; Light Rail Symbol;
2" Radius, 1" Border, White on Green;
[PARK &] D Mod;
[RIDE] D Mod;
Arrow 1 - 6" 90°;

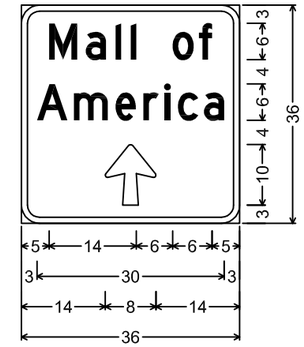


D-5;
3" Radius, 1" Border, White on Green;
[Mall of] D; [America] D;
Arrow 3 - 10" 90°;

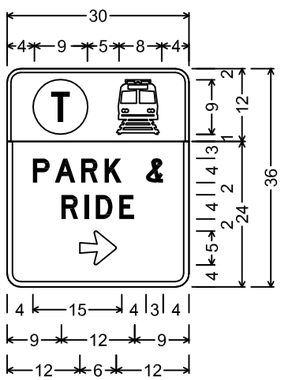


D-6;
2" Radius, 1" Border, White on White;
Metro Transit Symbol; Light Rail Symbol;
2" Radius, 1" Border, White on Green;
[PARK &] D Mod;
[RIDE] D Mod;
Arrow 1 - 6" 0°;

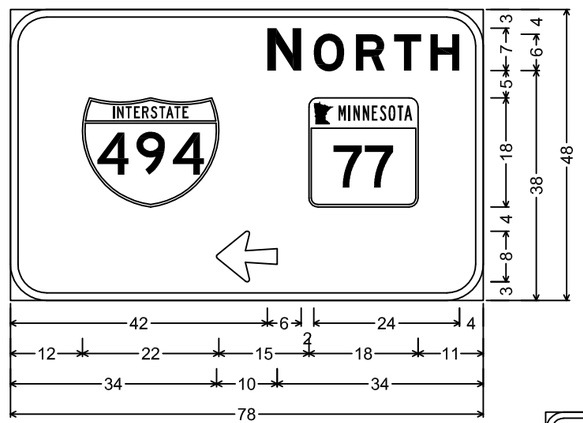


D-7; 6" Radius, 1" Border, White on Green;
[NORTH] E Mod; Arrow 3 - 10" 180°;

D-8;
3" Radius, 1" Border, White on Green;
[EAST] E Mod;
Arrow 3 - 10" 90°;

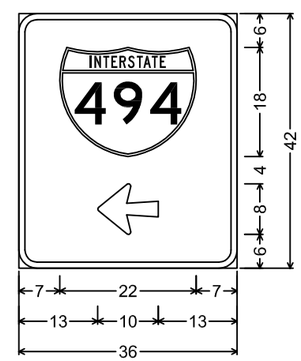


D-9;
3" Radius, 1" Border, White on Green;
Arrow 3 - 10" 180°;

D-10;
6" Radius, 1" Border, White on Brown;
[National] E Mod;
[Wildlife] E Mod; [Refuge] E Mod;
Arrow 3 - 10" 90°;

S.P. 107-030-005

2013-201 WAY FINDING PROJECT

SIGN PANELS

CITY OF BLOOMINGTON MINNESOTA
1700 W 98TH ST.
BLOOMINGTON MN 55431
PHONE (952) 563-8700

ALLIANT ENGINEERING
233 Park Ave S, Ste 300
Minneapolis, MN 55415
612.758.3080 MAIN
612.758.3099 FAX
www.alliant-inc.com

REVISIONS

| DATE | DESCRIPTION | BY |
|---|---|---|

I HEREBY CERTIFY THAT THIS PLAN WAS PREPARED BY ME OR UNDER MY DIRECT SUPERVISION AND THAT I AM A DULY LICENSED PROFESSIONAL ENGINEER UNDER THE LAWS OF THE STATE OF MINNESOTA.

THOMAS JENSEN — LIC. # 44247 — DATE 4/30/14

DRAWN: KAS
CHECKED: TJJ
APPROVED: TJJ

SHEET: 34 OF 82

Drawing name: X:\2012\120092\PlanSheets\120092-sp01.dwg -- Printed: May 16, 2014 - 3:26pm

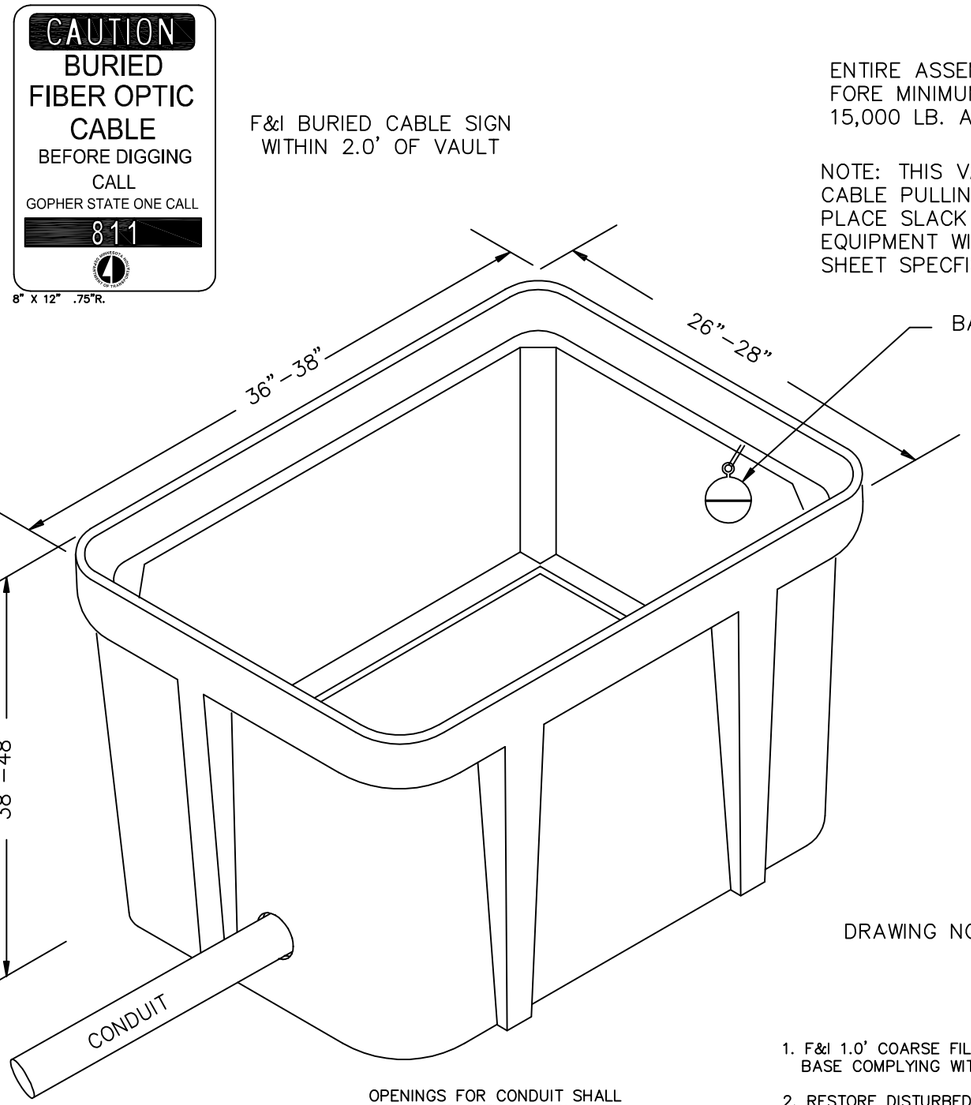


F&I BURIED CABLE SIGN
WITHIN 2.0' OF VAULT

ENTIRE ASSEMBLY SHALL BE RATED
FORE MINIMUM DESIGN LOAD OF
15,000 LB. AND TEST LOAD OF 20,000 LB.

NOTE: THIS VAULT TO BE USED FOR FIBER CABLE PULLING PURPOSES ONLY. DO NOT PLACE SLACK LOOP OR SPLICE ENCLOSURE EQUIPMENT WITHIN THIS VAULT UNLESS PLAN SHEET SPECFICALLY DIRECT.

MOUNT LOCATOR
BALL WITH TIE WRAP
TO LEDGE

COVER FEATURES

* (2) 3/8"–16 UNC X 3–1/2" LONG HEX HEAD STAINLESS STEEL BOLTS W/SELF ALIGNING REPLACEABLE STAINLESS STEEL NUTS POSITIONED IN HOLES TO ALLOW DRAINAGE OF SOIL & DEBRIS
* POLYMER CONCRETE FRP CONSTRUCTION
* NON–SKID SURFACE
* IDENTIFICATION LOGO: MnDOT FIBER

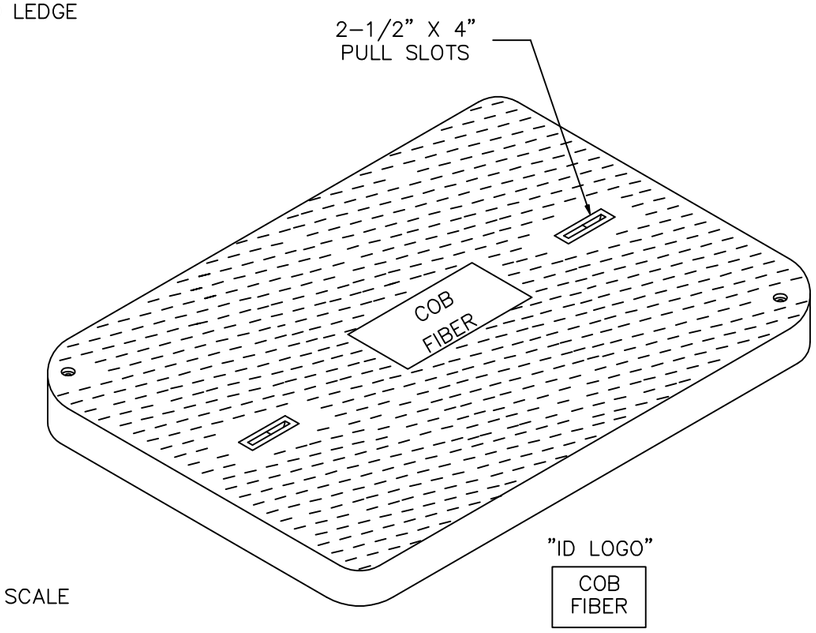


DRAWING NOT TO SCALE

OPENINGS FOR CONDUIT SHALL
BE SEALED WITH MATERIAL
COMPATIBLE SEALANT. (INCIDENTAL)

1. F&I 1.0' COARSE FILTER AGGREGATE UNDER BASE COMPLYING WITH MN/DOT 3149.2H. (INCIDENTAL)
2. RESTORE DISTURBED AREAS WITH SEED MIXTURE 240 AND TYPE I MULCH PER MNDOT 2575.3 (INCIDENTAL)
3. THE FRAME AND LID OF THE VAULT SHALL BE IN ACCORDANCE WITH UL LOAD RATING TIER–15
4. SET TOP COVER 8" ABOVE SURROUNDING GROUND AND TAPER AWAY AT 1:6 MIN. SLOPE

SEE SPECIAL PROVISIONS FOR
ADDITIONAL SPECIFICATIONS
AND "HAS MET" LISTINGS

S.P. 107–030–005

2013–201 WAY FINDING PROJECT

STANDARD DETAIL
FBIER OPTIC PULL VAULT

CITY OF BLOOMINGTON MINNESOTA
1700 W 98TH ST.
BLOOMINGTON MN 55431
PHONE (952) 563-8700

ALLIANT ENGINEERING
233 Park Ave S, Ste 300
Minneapolis, MN 55415
612.758.3080 MAIN
612.758.3099 FAX
www.alliant-inc.com

REVISIONS

| DATE | DESCRIPTION | BY |
|---|---|---|
| | | |

I HEREBY CERTIFY THAT THIS PLAN WAS PREPARED BY ME OR UNDER MY DIRECT SUPERVISION AND THAT I AM A DULY LICENSED PROFESSIONAL ENGINEER UNDER THE LAWS OF THE STATE OF MINNESOTA.

THOMAS JENSEN 44247 4/30/14
LIC. # DATE

DRAWN: KAS
CHECKED: TJJ
APPROVED: TJJ

SHEET:
35 OF 82

Drawing name: X:\2012\120092\PlanSheets\120092-dd01.dwg -- Printed: May 16, 2014 - 12:04pm

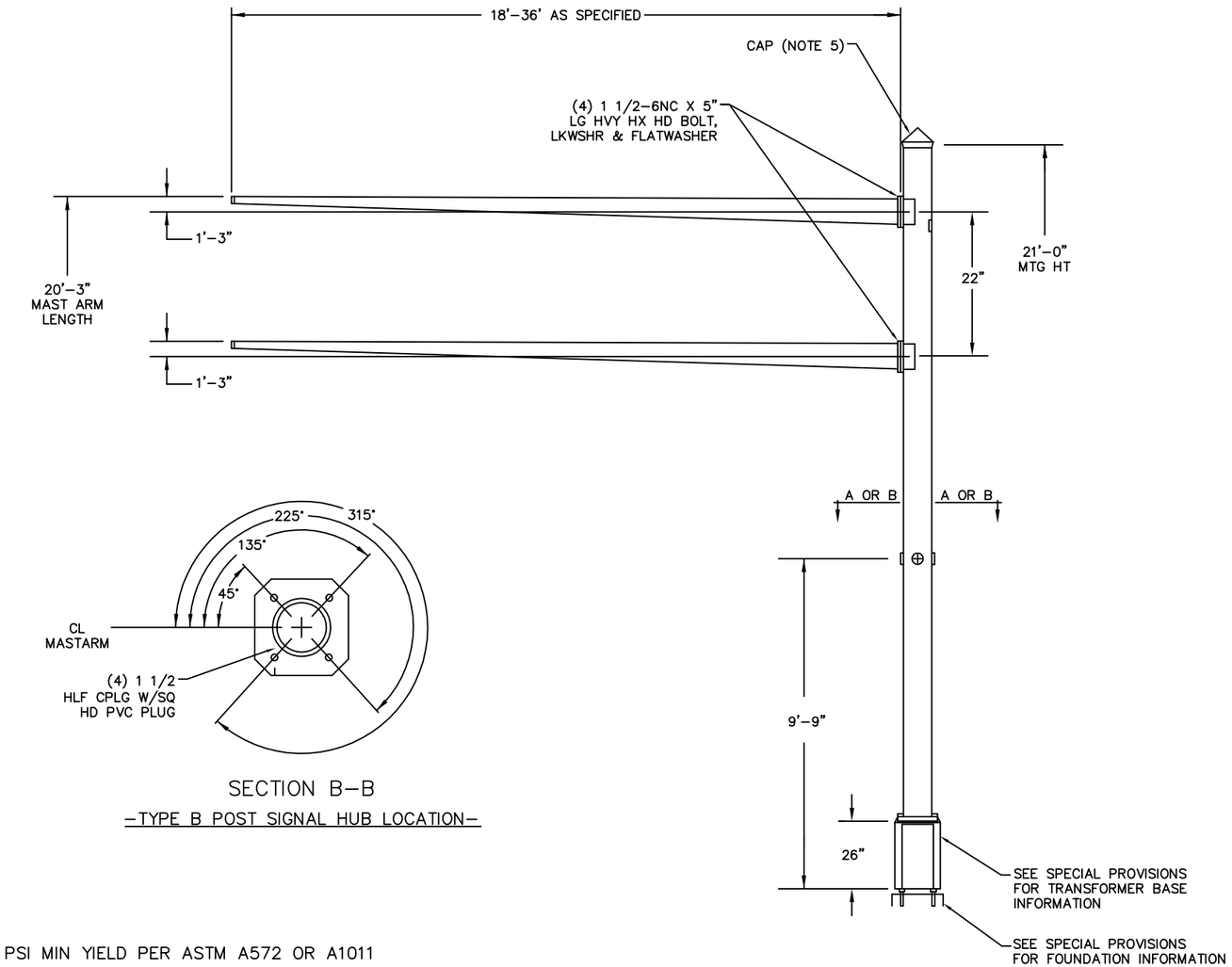


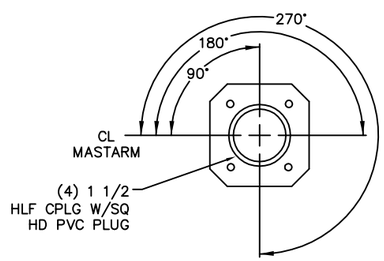


SECTION A–A

–TYPE A POST SIGNAL HUB LOCATION–




SECTION B–B

–TYPE B POST SIGNAL HUB LOCATION–

NOTES:

1. SHAFT & PLATE MATERIAL – HIGH STRENGTH LOW ALLOY STEEL 50,000 PSI MIN YIELD PER ASTM A572 OR A1011
2. FACTORY APPLIED PAINT FINISH TO MATCH RAL #9011 (GRANITE BLACK) SEMI–GLOSS
3. POST AND MASTARM TO BE OCTAGONAL TAPERED TUBE FABRICATED WITH ONE SUBMERGED ARC LONGITUDINAL SEAM WELD WITH 100% PENETRATION 6" FROM BASE PLATE CIRCUMFERENTIAL WELD AND REMAINDER 60%. GAS METAL ARC WELDING PROCESS TO BE USED FOR REMAINDER OF WELDED FABRICATION
4. THE VERTICAL SHAFT SHALL HAVE "PA100–MOD" STAMPED AT APPROX 6'–0" FROM THE TRANSFORMER BASE, 0° TO ARM. THE POLE TYPE SHALL BE CLEARLY LEGIBLE AFTER PAINTING
5. INSTALL A 590A17 CAP. ATTACH CAP W/(4) 5/16–18NC X 5/8 SET SCREW
6. HEAVY HEX HEAD BOLTS (UNLESS SPECIFIED) ASTM A325 FOR SIZES 1/2 THRU 1 1/2 DIA & A354BC FOR SIZES OVER 1 1/2 DIA, HVY HX NUTS A563, LOCK WASHERS F959 & FLAT WASHERS F436. ALL HARDWARE GALVANIZED PER ASTM A153
7. EXCEPT AS NOTED MAT'L & WORKMANSHIP PER CURRENT MN/DOT SPECS
8. WHEN MASTARM HINGES APPLY ATTACH WITH (4) 1 1/2–6NC X 4 1/2 LG HVY HX HD BOLT, (2) 1 1/2–6NC X 5 1/2 LG HVT HX HD BOLT & (6) 1 1/2 LKWSHR
9. SEE SPECIAL PROVISIONS FOR POLE AND MASTARM DETAIL INFORMATION

S.P. 107–030–005

2013–201 WAY FINDING PROJECT

STANDARD DETAIL

SIGNAL POLE

CITY OF BLOOMINGTON MINNESOTA
1700 W 98TH ST.
BLOOMINGTON MN 55431
PHONE (952) 563-8700

ALLIANT ENGINEERING
233 Park Ave S, Ste 300
Minneapolis, MN 55415
612.758.3080 MAIN
612.758.3099 FAX
www.alliant-inc.com

REVISIONS

| DATE | DESCRIPTION | BY |
|---|---|---|
| | | |

I HEREBY CERTIFY THAT THIS PLAN WAS PREPARED BY ME OR UNDER MY DIRECT SUPERVISION AND THAT I AM A DULY LICENSED PROFESSIONAL ENGINEER UNDER THE LAWS OF THE STATE OF MINNESOTA.

THOMAS JENSEN LIC. # 44247 DATE 4/30/14

DRAWN: KAS
CHECKED: TJJ
APPROVED: TJJ

SHEET: 36 OF 82

Drawing name: X:\2012\120092\PlanSheets\120092-dd03.dwg -- Printed: May 16, 2014 - 2:40pm

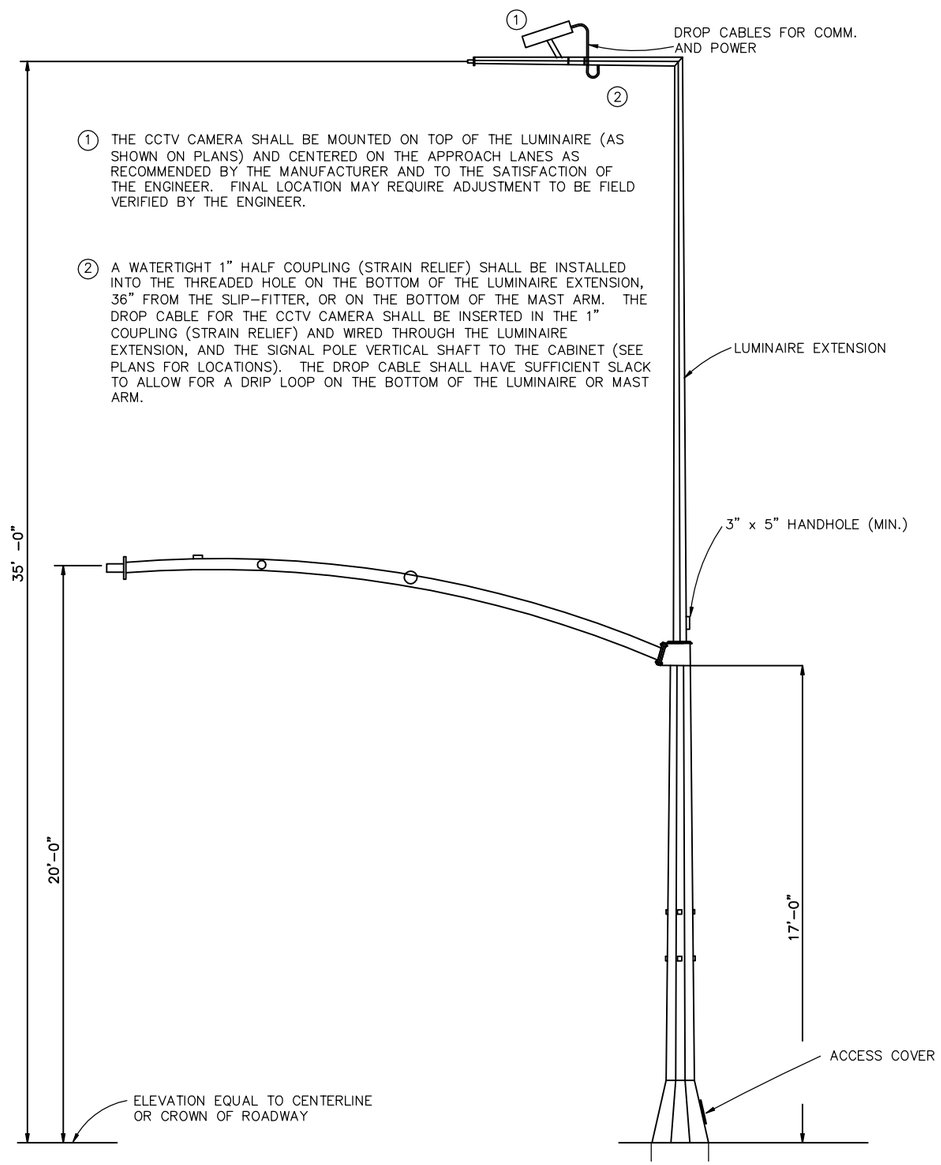


1. THE CCTV CAMERA SHALL BE MOUNTED ON TOP OF THE LUMINAIRE (AS SHOWN ON PLANS) AND CENTERED ON THE APPROACH LANES AS RECOMMENDED BY THE MANUFACTURER AND TO THE SATISFACTION OF THE ENGINEER. FINAL LOCATION MAY REQUIRE ADJUSTMENT TO BE FIELD VERIFIED BY THE ENGINEER.

2. A WATERTIGHT 1" HALF COUPLING (STRAIN RELIEF) SHALL BE INSTALLED INTO THE THREADED HOLE ON THE BOTTOM OF THE LUMINAIRE EXTENSION, 36" FROM THE SLIP-FITTER, OR ON THE BOTTOM OF THE MAST ARM. THE DROP CABLE FOR THE CCTV CAMERA SHALL BE INSERTED IN THE 1" COUPLING (STRAIN RELIEF) AND WIRED THROUGH THE LUMINAIRE EXTENSION, AND THE SIGNAL POLE VERTICAL SHAFT TO THE CABINET (SEE PLANS FOR LOCATIONS). THE DROP CABLE SHALL HAVE SUFFICIENT SLACK TO ALLOW FOR A DRIP LOOP ON THE BOTTOM OF THE LUMINAIRE OR MAST ARM.

MOUNTING DETAIL FOR CCTV ON SIGNAL
POLE LUMINAIRE SHAFT EXTENSION
(NO SCALE)

S.P. 107-030-005

2013-201 WAY FINDING PROJECT

STANDARD DETAIL
CCTV CAMERA MOUNTING DETAIL

CITY OF BLOOMINGTON MINNESOTA
1700 W 98TH ST.
BLOOMINGTON MN 55431
PHONE (952) 563-8700

ALLIANT ENGINEERING
233 Park Ave S, Ste 300
Minneapolis, MN 55415
612.758.3080 MAIN
612.758.3099 FAX
www.alliant-inc.com

REVISIONS

| DATE | DESCRIPTION | BY |
|---|---|---|
| | | |

I HEREBY CERTIFY THAT THIS PLAN WAS PREPARED BY ME OR UNDER MY DIRECT SUPERVISION AND THAT I AM A DULY LICENSED PROFESSIONAL ENGINEER UNDER THE LAWS OF THE STATE OF MINNESOTA.

THOMAS JENSEN 44247 4/30/14
LIC. # DATE

DRAWN: KAS
CHECKED: TJJ
APPROVED: TJJ

SHEET:
37 OF 82

Drawing name: X:\2012\120092\PlanSheets\120092-dd04.dwg -- Printed: May 16, 2014 - 1:54pm

| C | PLANT SCHEDULE – SYSTEMS B, F, AND I | | | | | | |
|---|---|---|---|---|---|---|---|
| SHRUBS | | | | | | | |
| QTY | SYM | COMMON NAME | BOTANICAL NAME | SIZE | ROOT | SPACING | REMARKS |
| | | | | | | | |
| 30 | FPR | FOXI PAVEMENT ROSE | ROSA RUGOSA 'FOXI PAVEMENT' | 2 YEAR – #5 | CONT. | 36" OC | – |
| | | | | | | | |
| PERENNIALS | | | | | | | |
| QTY | SYM | COMMON NAME | BOTANICAL NAME | SIZE | ROOT | SPACING | REMARKS |
| 24 | KFG | KARL FOERSTER GRASS | CALAMAROSTIS 'KARL FOERSTER' | 2 YEAR – #2 | CONT. | 18" OC | – |
| | | | | | | | |

PLANTING NOTES:

1. INSTALL 4" OF SHREDDED HARDWOOD MULCH IN ALL PERENNIAL AND SHRUB BEDS.
2. INSTALL RYERSON $\frac{1}{8}$"X 4" BLACK STEEL EDGER IN AREAS WHERE PERENNIAL OR SHRUB BEDS MEET TURF OR SOD.

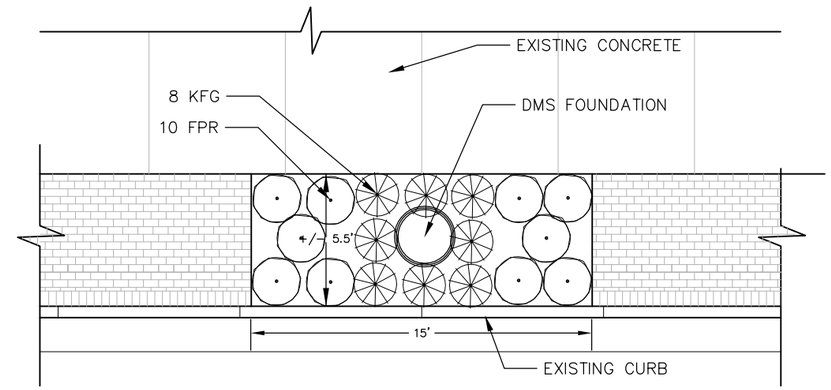


TYPICAL BOULEVARD PLANTING CUTOUT

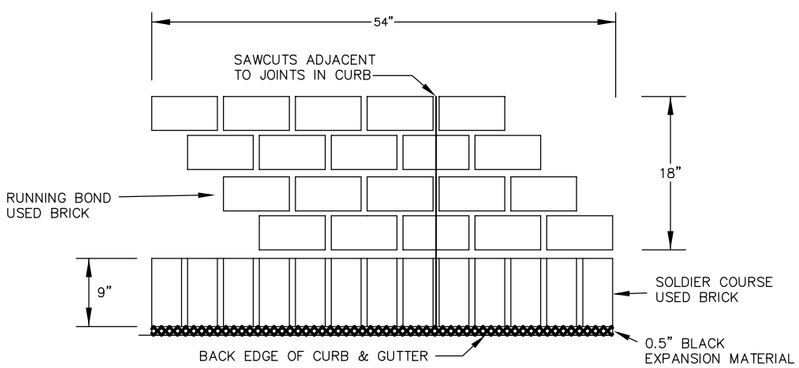


PATTERNS FOR SPECIAL TOOLS
FOR 4" CONC. WALK SPECIAL

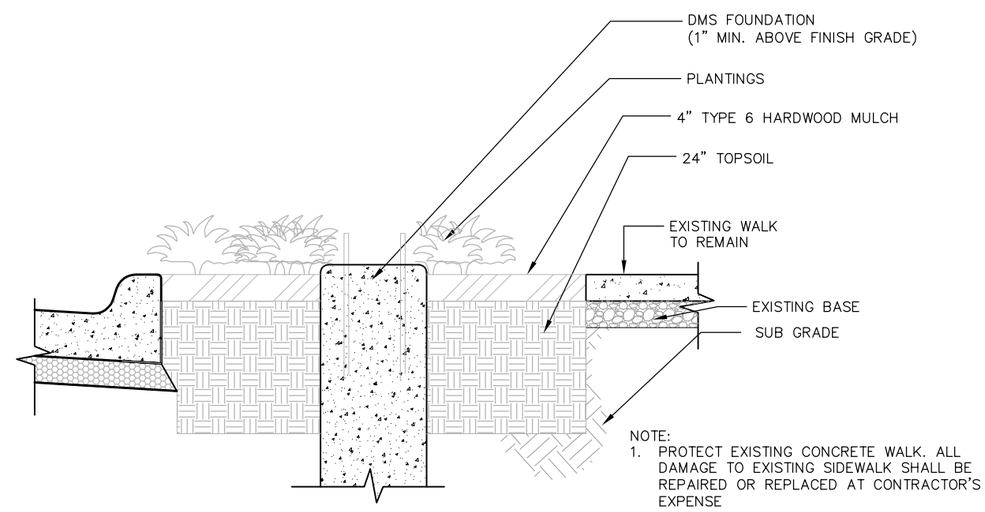


NOTE:
1. PROTECT EXISTING CONCRETE WALK. ALL DAMAGE TO EXISTING SIDEWALK SHALL BE REPAIRED OR REPLACED AT CONTRACTOR'S EXPENSE

CONCRETE FOOTER AT CUT-OUT

S.P. 107-030-005

2013-201 WAY FINDING PROJECT

LANDSCAPE DETAIL


CITY OF BLOOMINGTON MINNESOTA
1700 W 98TH ST.
BLOOMINGTON MN 55431
PHONE (952) 563-8700

ALLIANT ENGINEERING
233 Park Ave S, Ste 300
Minneapolis, MN 55415
612.758.3080 MAIN
612.758.3099 FAX
www.alliant-inc.com


REVISIONS

| DATE | DESCRIPTION | BY |
|---|---|---|
| | | |

I HEREBY CERTIFY THAT THIS PLAN WAS PREPARED BY ME OR UNDER MY DIRECT SUPERVISION AND THAT I AM A DULY LICENSED PROFESSIONAL ENGINEER UNDER THE LAWS OF THE STATE OF MINNESOTA.

THOMAS JENSEN 44247 4/30/14
LIC. # DATE

DRAWN: KAS
CHECKED: TJJ
APPROVED: TJJ

SHEET:
38 OF 82

Drawing name: X:\2012\120092\PlanSheets\120092-dd05.dwg -- Printed: May 16, 2014 - 1:55pm

# MAST ARM SIGN DETAILS

## MAST ARM DYNAMIC MESSAGE SIGN AND SOUTH LOOP DISTRICT SIGN LOCATION

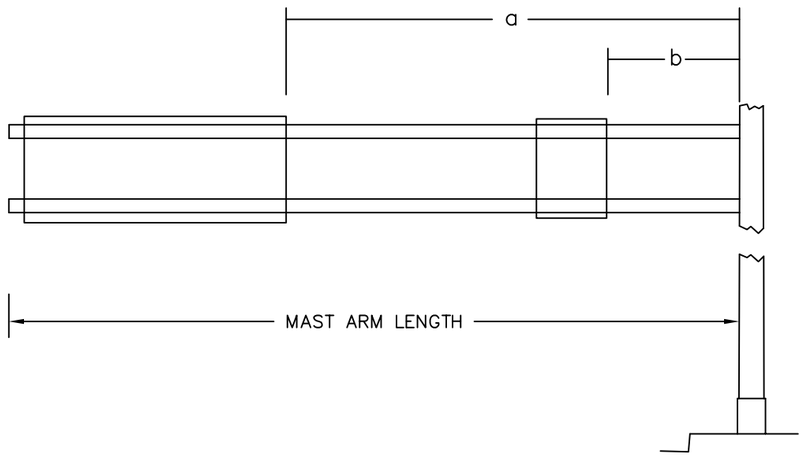


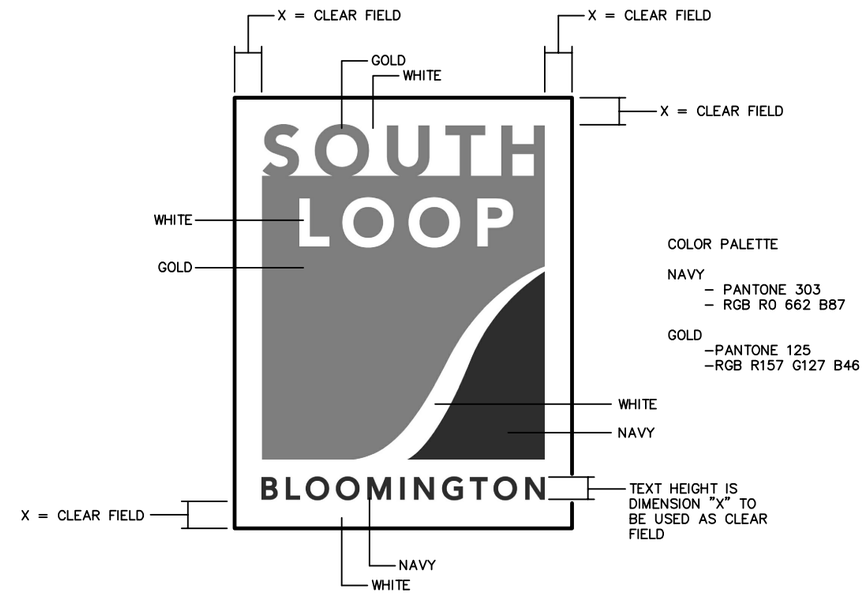


SPECIFIC NOTES:

(1) SPACING BETWEEN STIFFENERS SHALL NOT EXCEED 36 INCHES AND SHALL BE UNIFORMLY SPACED. SEE STANDARD SIGNS MANUAL, PAGE 105A FOR BRACKET SPACING REQUIREMENTS.

GENERAL NOTES:

1. FOR STRUCTURAL DETAILS OF MAST ARM MOUNTED SIGNS SEE STANDARD SIGNS MANUAL, PAGE 105A.
2. FOR TYPE D STRINGER AND PANEL JOINT DETAILS SEE STANDARD SIGNS MANUAL, PAGE 105.
3. THE MAST ARM MOUNTED SIGNS ARE INCIDENTAL.

## D — MAST ARM MOUNTED SIGNS

| ID | LOCATION DESCRIPTION | POLE LOCATION | | MAST ARM LENGTH | APPROX. DMS WIDTH | a | b | REMARKS |
|---|---|---|---|---|---|---|---|---|
| | | X COORD. | Y COORD. | FEET | FEET | FEET | FEET | |
| DMS–1 | SB 34TH AVE S PRIOR TO AMERICAN BLVD | 541477.1 | 125307.4 | 28 | 9.25 | 18 | 1 | DMS SHOULD BE APPROXIMATELY CENTERED OVER LANE |
| DMS–2 | NB E OLD SHAKOPEE RD PRIOR TO KILLEBREW DR | 537733.7 | 121803.2 | 18 | 9.25 | 8 | 1 | DMS SHOULD BE APPROXIMATELY CENTERED OVER LANE |
| DMS–3 | EB KILLEBREW DR PRIOR TO 20TH AVE S | 536066.7 | 122292.7 | 30 | 9.25 | 19 | 1 | DMS SHOULD BE APPROXIMATELY CENTERED OVER LANE |
| DMS–4 | SB TH 77 RAMP TO LINDAU LN | N/A | N/A | N/A | 9.25 | N/A | N/A | DMS SHOULD BE APPROXIMATELY CENTERED OVER LANE |
| DMS–5 | EB KILLEBREW DR PRIOR 22ND AVE S | 536576.0 | 122353.5 | 34 | 9.25 | 24 | 1 | DMS SHOULD BE APPROXIMATELY CENTERED OVER LANE |
| DMS–6 | EB LINDAU LN PRIOR TO 22ND AVE S | N/A | N/A | N/A | 9.25 | N/A | N/A | DMS SHOULD BE APPROXIMATELY CENTERED OVER LANE |
| DMS–7 | SB 24TH AVE S PRIOR TO E 79TH ST | 537700.3 | 125345.4 | 36 | 9.25 | 26 | 1 | DMS SHOULD BE APPROXIMATELY CENTERED OVER LANE |
| DMS–8 | WB AMERICAN BLVD PRIOR TO 28TH AVE S | 539450.4 | 124738.8 | 18 | 9.25 | 7 | 1 | DMS SHOULD BE APPROXIMATELY CENTERED OVER LANE |
| DMS–9 | SB 24TH AVE S PRIOR TO MALL OF AMERICA GATE 5 | 537726.3 | 123703.9 | 30 | 9.25 | 19 | 1 | DMS SHOULD BE APPROXIMATELY CENTERED OVER LANE |
| DMS–10 | EB AMERICAN BLVD PRIOR TO THUNDERBIRD RD | 536190.0 | 125059.3 | 28 | 9.25 | 18 | 1 | DMS SHOULD BE APPROXIMATELY CENTERED OVER LANE |
| DMS–12 | WB E OLD SHAKOPEE RD PRIOR TO 24TH AVE S | 538456.4 | 122137.7 | 30 | 9.25 | 19 | 1 | DMS SHOULD BE APPROXIMATELY CENTERED OVER LANE |
| DMS–15 | NB 24TH AVE S PRIOR TO 82ND ST | 537864.0 | 123002.3 | 32 | 9.25 | 22 | 1 | DMS SHOULD BE APPROXIMATELY CENTERED OVER LANE |
| DMS–16 | SB 24TH AVE S PRIOR TO LINDAU LN | 537709.8 | 124440.1 | 34 | 9.25 | 24 | 1 | DMS SHOULD BE APPROXIMATELY CENTERED OVER LANE |
| | | | | | | | | |

S.P. 107–030–005

2013–201 WAY FINDING PROJECT

MAST ARM SIGN DETAILS


CITY OF BLOOMINGTON MINNESOTA
1700 W 98TH ST.
BLOOMINGTON MN 55431
PHONE (952) 563-8700

ALLIANT ENGINEERING
233 Park Ave S, Ste 300
Minneapolis, MN 55415
612.758.3080 MAIN
612.758.3099 FAX
www.alliant-inc.com


REVISIONS

| DATE | DESCRIPTION | BY |
|---|---|---|
| | | |

I HEREBY CERTIFY THAT THIS PLAN WAS PREPARED BY ME OR UNDER MY DIRECT SUPERVISION AND THAT I AM A DULY LICENSED PROFESSIONAL ENGINEER UNDER THE LAWS OF THE STATE OF MINNESOTA.

THOMAS JENSEN 44247 4/30/14
LIC. # DATE

DRAWN: KAS
CHECKED: TJJ
APPROVED: TJJ

SHEET: 39 OF 82


Drawing name: X:\2012\120092\PlanSheets\120092-tab03.dwg -- Printed: May 16, 2014 - 10:13am

1. F&I POWER CABLE FROM SOURCE OF POWER – TERMINATE AT TERMINAL BLOCK *
2. PULL BACK AND RE-ROUTE EXISTING 1-FO PIGTAIL FROM SIGNAL CABINET TO 334 CONTROL CABINET. PLACE 30' SLACK LOOP OF PIGTAIL CABLE WITHIN CABINET AGAINST SIDEWALL. CONNECT ARMOUR TO NORSCAN DEVICE – TERMINATE END & LAND IN PATCH PANEL *
3. F&I FIBER OPTIC PATCH CORD(S)*
4. F&I 1-FO PIGTAIL TO DMS
5. F&I 1-1/C NO. 6 BARE GROUND WIRE – COAT CONNECTION WITH ANTI-OXIDIZING AGENT
6. INSTALL NEOPRENE GASKET (CITY PROVIDED)*
7. INSTALL COMMUNICATION EQUIPMENT (CITY PROVIDED)*
8. SHEATH GROUNDING UNIT
9. F&I CCTV POWER SUPPLY
10. F&I CAT6 PATCH CABLE(S)*
11. F&I CCTV CABLE

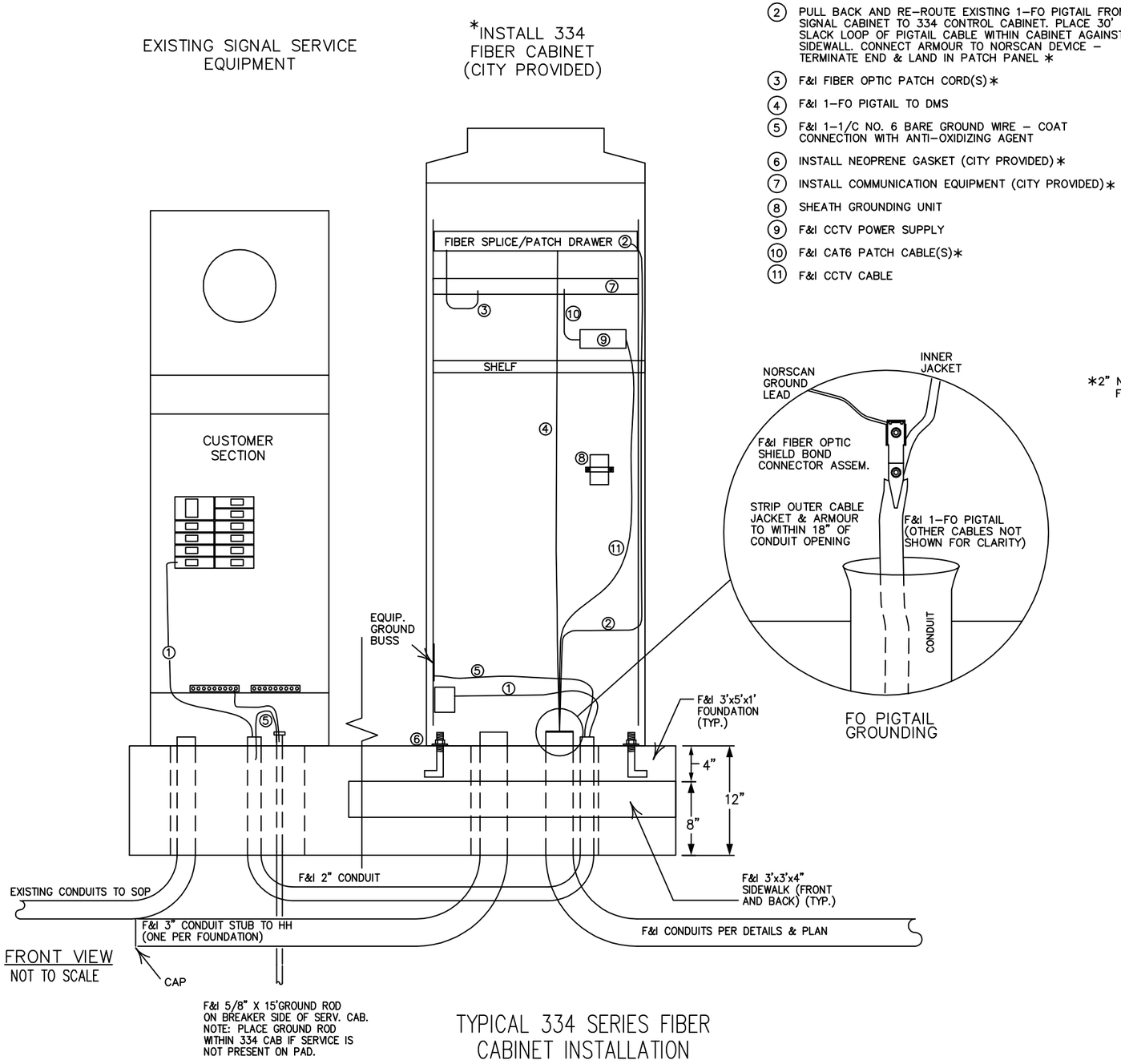


TYPICAL 334 SERIES FIBER CABINET INSTALLATION

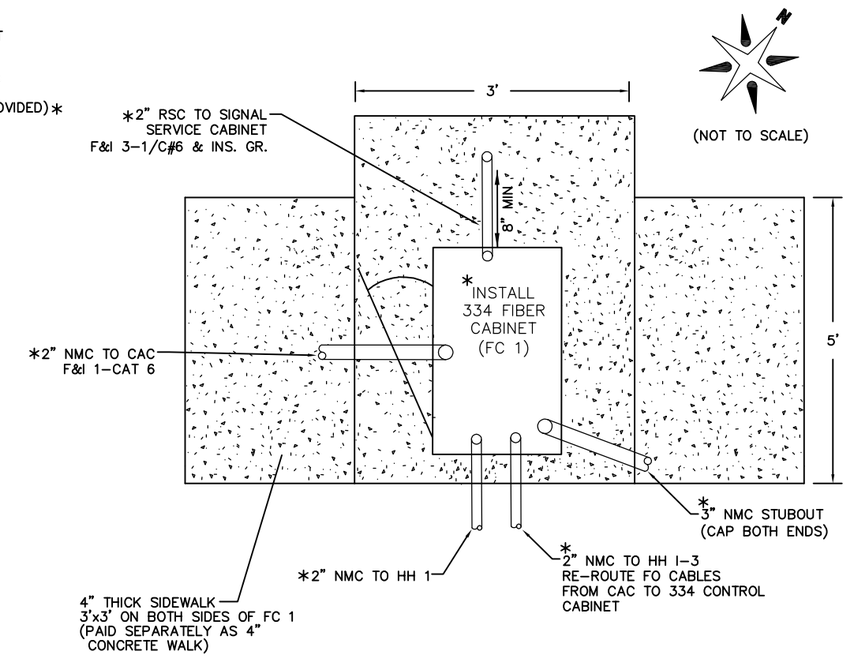


*DENOTES INTERCONNECT PAY ITEM

NOTES:

1. THE UPPER PART OF THE EQUIPMENT PAD SHALL BE BEVELED OR CHAMFERED IN A NEAT MANNER AS APPROVED BY THE ENGINEER.
2. THE TOP OF THE CONDUITS SHALL BE THREADED AND CAPPED AFTER INSTALLATION (UNTIL CABLES ARE INSTALLED).
3. THE LOCATION OF CONDUITS WITHIN THE CONCRETE PAD SHALL BE 6" TO THE CENTER OF THE CONDUIT FROM THE INSIDE LIP OF THE MOUNTING FLANGE ON THE DOOR SIDE OF THE CABINET. THE CONDUITS SHALL PROJECT 2" TO 3" ABOVE THE CONCRETE. THE CONDUITS SHALL NOT INTERFERE WITH THE CABINET FUNCTIONS (CONTROL EQUIPMENT, SUPPORTING MEMBERS, ETC.). FINAL CONDUIT LOCATIONS SHALL BE DIRECTED BY THE ENGINEER.
4. CONDUITS WITH BOTH ENDS TERMINATING WITHIN THE PAD SHALL NOT BE INSTALLED BELOW CONCRETE.
5. THE EXACT LOCATION OF CONDUITS WITHIN THE PAD SHALL BE DETERMINED BY THE ENGINEER IN THE FIELD.
6. A SIDEWALK OR CONCRETE AREA SHALL BE ON THE DOOR SIDE OF THE CABINET IN ALL CASES.
7. CONCRETE MIX 3Y43 OR APPROVED EQUAL SHALL BE USED FOR THE EQUIPMENT PAD AND ADJACENT SIDEWALK.
8. TOP OF EQUIPMENT PAD TO BE 12" ABOVE FINISHED GRADE. LOCATION AND ELEVATION OF EQUIPMENT PAD TOP SHALL BE STAKED BY SURVEY CREW.
9. SEE DETAIL IN PLANS FOR SP 1. REFER TO DIVISION SS (SPECIAL PROVISIONS) FOR SP 2.

S.P. 107-030-005

2013-201 WAY FINDING PROJECT

REVISE SIGNAL SYSTEM A

LINDAU LN AND IKEA WAY

334 FIBER CABINET DETAIL


CITY OF BLOOMINGTON MINNESOTA
1700 W 98TH ST. BLOOMINGTON MN 55431 PHONE (952) 563-8700
ALLIANT ENGINEERING
233 Park Ave S, Ste 300 Minneapolis, MN 55415
612.758.3080 MAIN
612.758.3099 FAX
www.alliant-inc.com


REVISIONS

| DATE | DESCRIPTION | BY |
|---|---|---|
| | | |

I HEREBY CERTIFY THAT THIS PLAN WAS PREPARED BY ME OR UNDER MY DIRECT SUPERVISION AND THAT I AM A DULY LICENSED PROFESSIONAL ENGINEER UNDER THE LAWS OF THE STATE OF MINNESOTA.

THOMAS JENSEN 44247 4/30/14
LIC. # DATE

DRAWN: KAS
CHECKED: TJJ
APPROVED: TJJ

SHEET: 40 OF 82

Drawing name: X:\2012\120092\PlanSheets\120092-dd02.dwg -- Printed: May 16, 2014 - 12:08pm

NOTE:
SIGNAL INSTALLATION AND BRIDGE CONSTRUCTION BY OTHERS. COORDINATE INSTALLATION WITH 2013-302 LINDAU LANE GRADE SEPARATION CONTRACTOR.

HH 11 TO HH 10
INPLACE:
2-3" NMC
5-12/C#14
1-3/C#20
1-3/C#14
1-3/C#14 (LUM)
1-VIDEO CABLE
1-1/C#6 INS. GR
F&I:
**1-3/C#8**
**1-FO PIGTAIL (6SM)**

HH 12 TO H 11
INPLACE:
2-3" NMC
6-12/C#14
1-3/C#20
1-3/C#14
1-3/C#14 (LUM)
1-VIDEO CABLE
1-1/C#6 INS. GR.
F&I:
**1-3/C#8**
**1-FO PIGTAIL (6SM)**

HH 1 TO HH 12
INPLACE:
2-4" NMC
9-12/C#14
2-3/C#20
2-3/C#14
2-3/C#14 (LUM)
2-VIDEO CABLE
1-1/C#6 INS. GR.
F&I:
**1-3/C#8**
**1-FO PIGTAIL (6SM)**

SP 1 TO HH 2
INPLACE:
1-2" NMC
4-3/C#14 (LUM.)
6-1/C#6 (CCTV POWER)
F&I:
**2-3/C#8**

HH 1 TO HH 2
INPLACE:
1-2" NMC
2-3/C#14 (LUM.)
3-1/C#6 (CCTV POWER)
F&I:
**1-3/C#8**
**1-FO PIGTAIL (6SM)**
**1-CCTV CABLE**

CAC 1 TO HH 1
INPLACE:
2-4" NMC
9-12/C#14
2-3/C#20
2-3/C#14
2-VIDEO CABLE
1-1/C#6 INS. GR.
F&I:
**2-FO PIGTAIL (6SM)**
**1-CCTV CABLE**

HH 2 TO HH 6
INPLACE:
2-3" NMC
5-12/C#14
1-3/C#20
1-3/C#14
1-3/C#14 (LUM)
1-VIDEO CABLE
1-1/C#6 INS. GR
3-1/C#6 (CCTV POWER)
F&I:
**1-3/C#8**
**1-FO PIGTAIL (6SM)**
**1-CCTV CABLE**

N

0 20 40
SCALE IN FEET

* DENOTES INTERCONNECT PAY ITEM

MATCH LINE – SEE SHEET 42

IKEA WAY

LINDAU LN

F&I 1-CCTV HARDWARE ON TOP OF EXISTING LUMINAIRE

HH 9 TO HH 13
F&I:
**1-1.5" NMC WITH**
**1-3/C#8**
**1-1.5" NMC WITH**
**1-FO PIGTAIL (6SM)**

4 BCHH POLE FOUNDATION
BCHH -40-200; I 35-6 B-11 C-23
3-ONE WAY SIGNALS-OVERHEAD; B-11 C-23
2-ANGLE MOUNT SIGNAL INDICATIONS-POLE MOUNTED AT 90° AND 180°
ONE WAY EVP DETECTOR AND CONFIRMATORY LIGHT OVERHEAD (Ø2 + Ø5)
1-LUMINAIRE-156W LED 2
1-VIDEO DETECTION UNIT (V-2)-MAST ARM MOUNTED
1-CCTV CAMERA
1-TYPE "D" SIGN PANEL (126X24)-OVERHEAD D-2
2-TYPE R9-3A SIGNS FACING POLES 1 AND 4
F&I: **1-CCTV HARDWARE**

EXTENDED TO HH 7:
1-3" NMC
3-12/C#14
1-3/C#20
1-3/C#14
1-3/C#14 (LUM)
1-VIDEO CABLE
1-1/C#6 INS. GR.
6-1/C#6 (CCTV POWER)
F&I: **1-CCTV CABLE**

EXTENDED TO HH CCTV 2:
1-2" NMC
1-CCTV CABLE

HH 10 TO HH 9
INPLACE:
2-3" NMC
3-12/C#14
1-3/C#20
1-3/C#14
1-3/C#14 (LUM)
1-VIDEO CABLE
1-1/C#6 INS. GR.
F&I:
**1-3/C#8**
**1-FO PIGTAIL (6SM)**

HH 6 TO HH 7
INPLACE:
2-3" NMC
3-12/C#14
1-3/C#20
1-3/C#14
1-3/C#14 (LUM)
1-VIDEO CABLE
1-1/C#6 INS. GR
3-1/C#6 (CCTV POWER)
F&I:
**1-3/C#8**
**1-FO PIGTAIL (6SM)**
**1-CCTV CABLE**

HH 7 TO MA 3
INPLACE:
2-3" NMC
3-12/C#14
1-3/C#20
1-3/C#14
1-3/C#14 (LUM)
1-VIDEO CABLE
1-1/C#6 INS. GR
3-1/C#6 (CCTV POWER)
F&I:
**1-CCTV CABLE**

HH 7 TO HH 9
INPLACE:
1-2" NMC
3-1/C#6 (CCTV POWER)
F&I:
**1-3/C#8**
**1-FO PIGTAIL (6SM)**

HH 9 (SYS "B") TO MA 9
**1-1.5" NMC WITH**
**1-3/C#8**
**1-1.5" NMC WITH**
**1-FO PIGTAIL (6SM)**

10 MOUNT DMS ON BRIDGE
DYNAMIC MESSAGE SIGN (DMS-6)
(SEE SPECIAL PROVISIONS)

S.P. 107-030-005

# 2013-201 WAY FINDING PROJECT

## REVISE SIGNAL SYSTEM A

LINDAU LN AND IKEA WAY
INTERSECTION LAYOUT


CITY OF BLOOMINGTON MINNESOTA
1700 W 98TH ST.
BLOOMINGTON MN 55431
PHONE (952) 563-8700

ALLIANT ENGINEERING
233 Park Ave S, Ste 300
Minneapolis, MN 55415
612.758.3080 MAIN
612.758.3099 FAX
www.alliant-inc.com


REVISIONS

| DATE | DESCRIPTION | BY |
|---|---|---|
| | | |

I HEREBY CERTIFY THAT THIS PLAN WAS PREPARED BY ME OR UNDER MY DIRECT SUPERVISION AND THAT I AM A DULY LICENSED PROFESSIONAL ENGINEER UNDER THE LAWS OF THE STATE OF MINNESOTA.

THOMAS JENSEN 44247 4/30/14
LIC. # DATE

DRAWN: KAS
CHECKED: TJJ
APPROVED: TJJ

SHEET:
42 OF 82

Drawing name: X:\2012\120092\PlanSheets\120092-sysA.dwg -- Printed: May 16, 2014 - 2:35pm

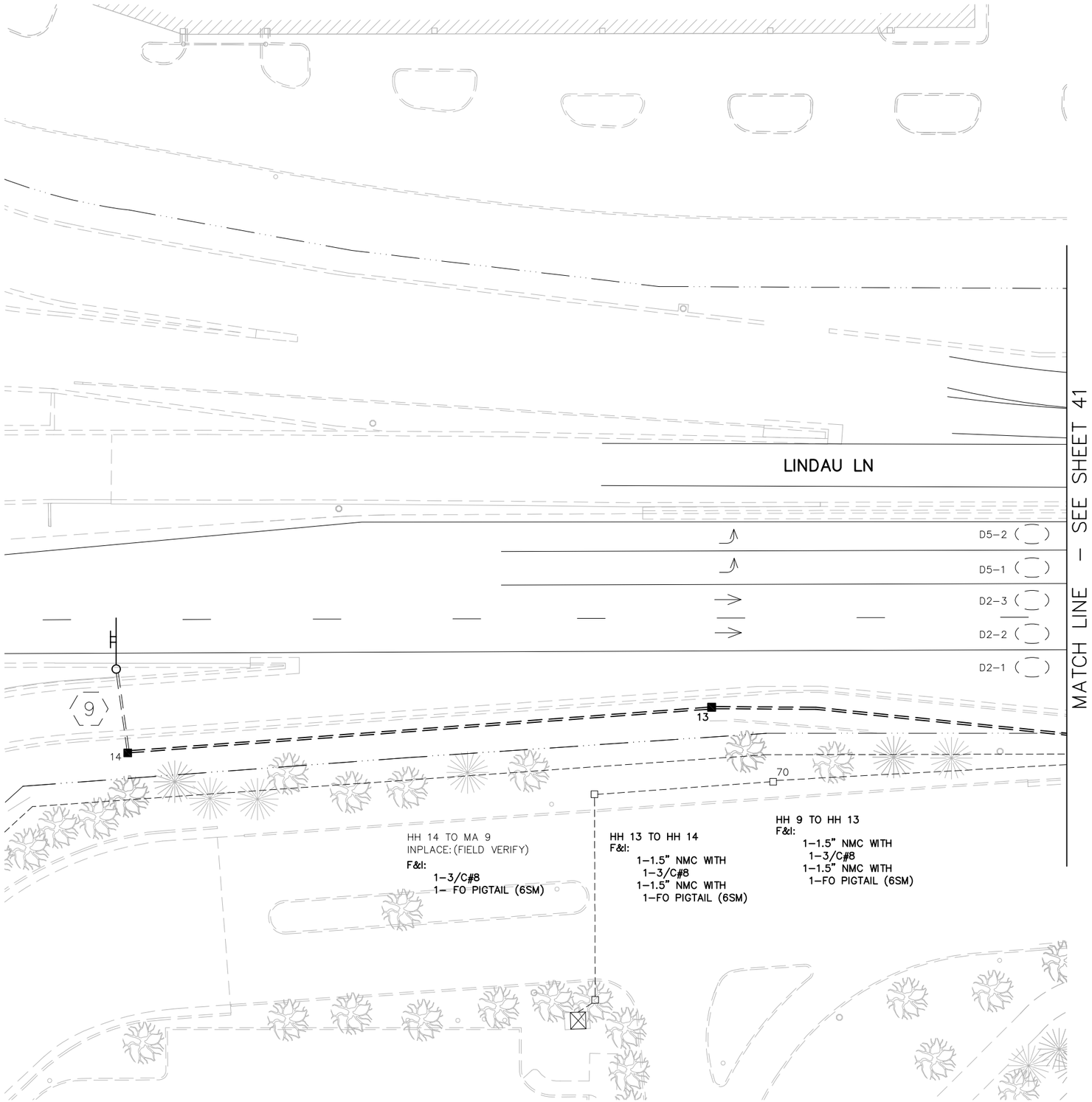


N

0 20 40

SCALE IN FEET

9 MOUNT DMS ON EXISTING SIGN STRUCTURE
DYNAMIC MESSAGE SIGN (DMS-4)
(SEE SPECIAL PROVISIONS)

# 2013-201 WAY FINDING PROJECT

## REVISE SIGNAL SYSTEM A

LINDAU LN AND IKEA WAY

INTERSECTION LAYOUT MATCHLINES

CITY OF BLOOMINGTON MINNESOTA
1700 W 98TH ST.
BLOOMINGTON MN 55431
PHONE (952) 563-8700

ALLIANT ENGINEERING
233 Park Ave S, Ste 300
Minneapolis, MN 55415
612.758.3080 MAIN
612.758.3099 FAX
www.alliant-inc.com

REVISIONS

| DATE | DESCRIPTION | BY |
|---|---|---|
| | | |

I HEREBY CERTIFY THAT THIS PLAN WAS PREPARED BY ME OR UNDER MY DIRECT SUPERVISION AND THAT I AM A DULY LICENSED PROFESSIONAL ENGINEER UNDER THE LAWS OF THE STATE OF MINNESOTA.

THOMAS JENSEN 44247 4/30/14
LIC. # DATE

DRAWN: KAS
CHECKED: TJJ
APPROVED: TJJ

SHEET:
42 OF 82

S.P. 107-030-005

Drawing name: X:\2012\120092\PlanSheets\120092-sysA.dwg -- Printed: May 16, 2014 - 2:36pm

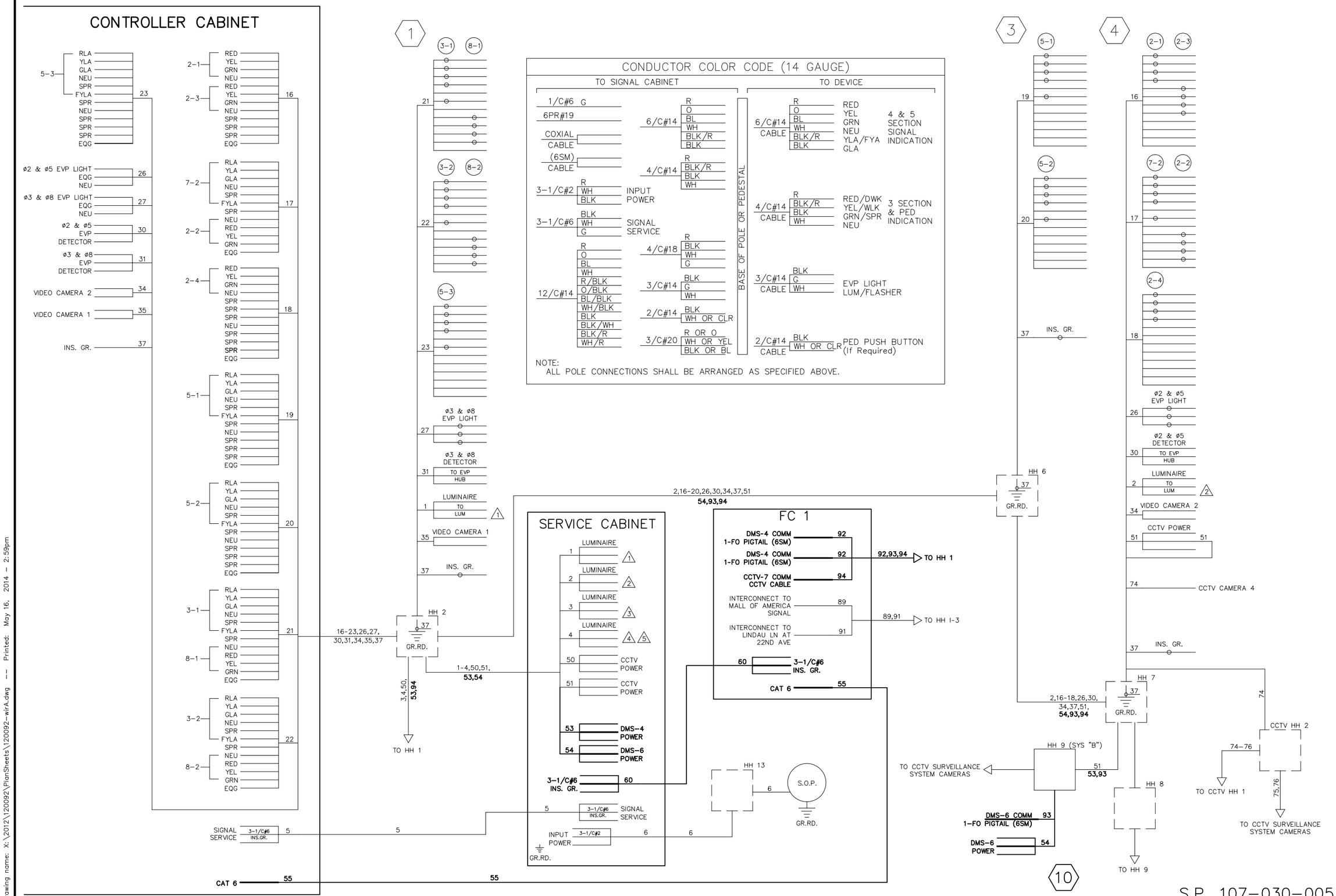


# 2013-201 WAY FINDING PROJECT

## REVISE SIGNAL SYSTEM A

LINDAU LN AND IKEA WAY

WIRING DIAGRAM – SHEET 1 OF 2


CITY OF BLOOMINGTON MINNESOTA
1700 W 98TH ST. BLOOMINGTON MN 55431 PHONE (952) 563-8700

ALLIANT ENGINEERING
233 Park Ave S, Ste 300
Minneapolis, MN 55415
612.758.3080 MAIN
612.758.3099 FAX
www.alliant-inc.com


REVISIONS

| DATE | DESCRIPTION | BY |
|---|---|---|
| | | |

I HEREBY CERTIFY THAT THIS PLAN WAS PREPARED BY ME OR UNDER MY DIRECT SUPERVISION AND THAT I AM A DULY LICENSED PROFESSIONAL ENGINEER UNDER THE LAWS OF THE STATE OF MINNESOTA.

THOMAS JENSEN 44247 4/30/14 LIC. # DATE

DRAWN: KAS
CHECKED: TJJ
APPROVED: TJJ

SHEET: 43 OF 82

Drawing name: X:\2012\120092\PlanSheets\120092-wirA.dwg -- Printed: May 16, 2014 - 2:59pm

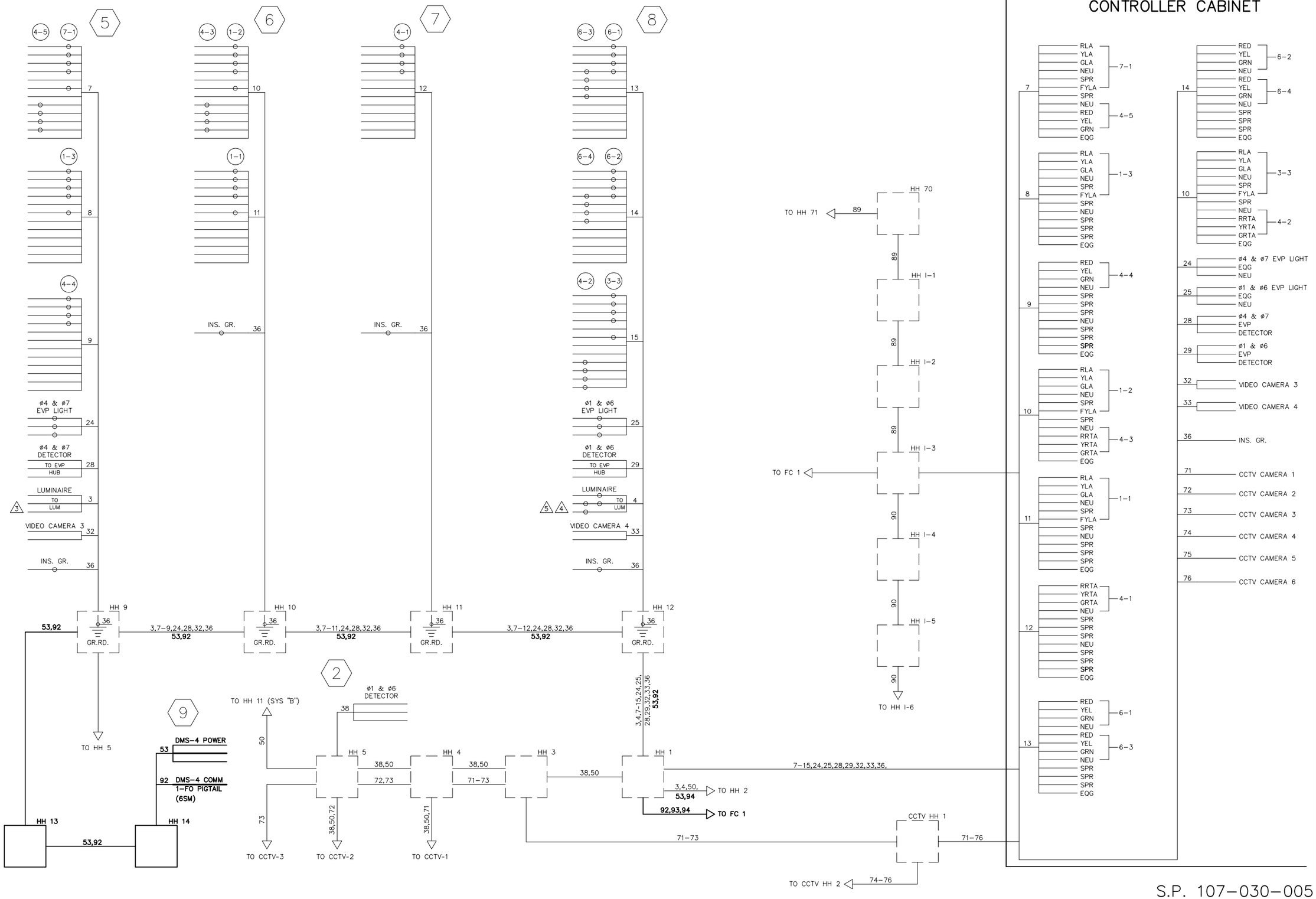


# 2013-201 WAY FINDING PROJECT

## REVISE SIGNAL SYSTEM A

LINDAU LN AND IKEA WAY

WIRING DIAGRAM – SHEET 2 OF 2


CITY OF BLOOMINGTON MINNESOTA
1700 W 98TH ST.
BLOOMINGTON MN 55431
PHONE (952) 563-8700

ALLIANT ENGINEERING
233 Park Ave S, Ste 300
Minneapolis, MN 55415
612.758.3080 MAIN
612.758.3099 FAX
www.alliant-inc.com


REVISIONS

| DATE | DESCRIPTION | BY |
|---|---|---|
| | | |

I HEREBY CERTIFY THAT THIS PLAN WAS PREPARED BY ME OR UNDER MY DIRECT SUPERVISION AND THAT I AM A DULY LICENSED PROFESSIONAL ENGINEER UNDER THE LAWS OF THE STATE OF MINNESOTA.

THOMAS JENSEN 44247 4/30/14
LIC. # DATE

DRAWN: KAS
CHECKED: TJJ
APPROVED: TJJ

SHEET:
44 OF 82

S.P. 107-030-005

Drawing name: X:\2012\120092\PlanSheets\120092-wirA.dwg -- Printed: May 16, 2014 - 2:58pm

1. F&I POWER CABLE FROM SOURCE OF POWER – TERMINATE AT TERMINAL BLOCK *
2. F&I 1–FO PIGTAIL TO DMS. SEE PLANS FOR QUANTITY. PLACE 30' SLACK LOOP OF PIGTAIL CABLE WITHIN CABINET AGAINST SIDEWALL. CONNECT ARMOUR TO NORSCAN DEVICE – TERMINATE END & LAND IN PATCH PANEL *
3. F&I FIBER OPTIC PATCH CORD(S) *
4. F&I 1–1/C NO. 6 BARE GROUND WIRE – COAT CONNECTION WITH ANTI–OXIDIZING AGENT *
5. INSTALL NEOPRENE GASKET (CITY PROVIDED) *
6. INSTALL COMMUNICATION EQUIPMENT (CITY PROVIDED) *
7. SHEATH GROUNDING UNIT
8. RELOCATE CCTV POWER SUPPLY FROM CAC TO FC 1 *
9. F&I CAT 6 PATCH CABLE(S) *
10. F&I 1–48 POSITION SPLICE/PATCH PANEL *
11. PULL BACK AND RE–ROUTE EXISTING FO INTERCONNECT FROM CAC TO FC 1. PLACE SLACK LOOP OF CABLE AGAINST SIDEWALL. TERMINATE END AND LAND IN PATCH PANEL. *
12. F&I 1–CAT 6 TO CAC. TERMINATE BOTH ENDS. *
13. PULL BACK AND RE–ROUTE EXISTING CCTV CABLE FROM CAC TO FC 1 *
14. PULL BACK AND RE–ROUTE EXISTING TWISTED PAIR INTERCONNECT FROM CAC TO FC 1. PLACE SLACK LOOP OF CABLE AGAINST SIDEWALL. TERMINATE ACTIVE POLES ONLY. SEE SPECIAL PROVISIONS. *

*DENOTES INTERCONNECT PAY ITEM

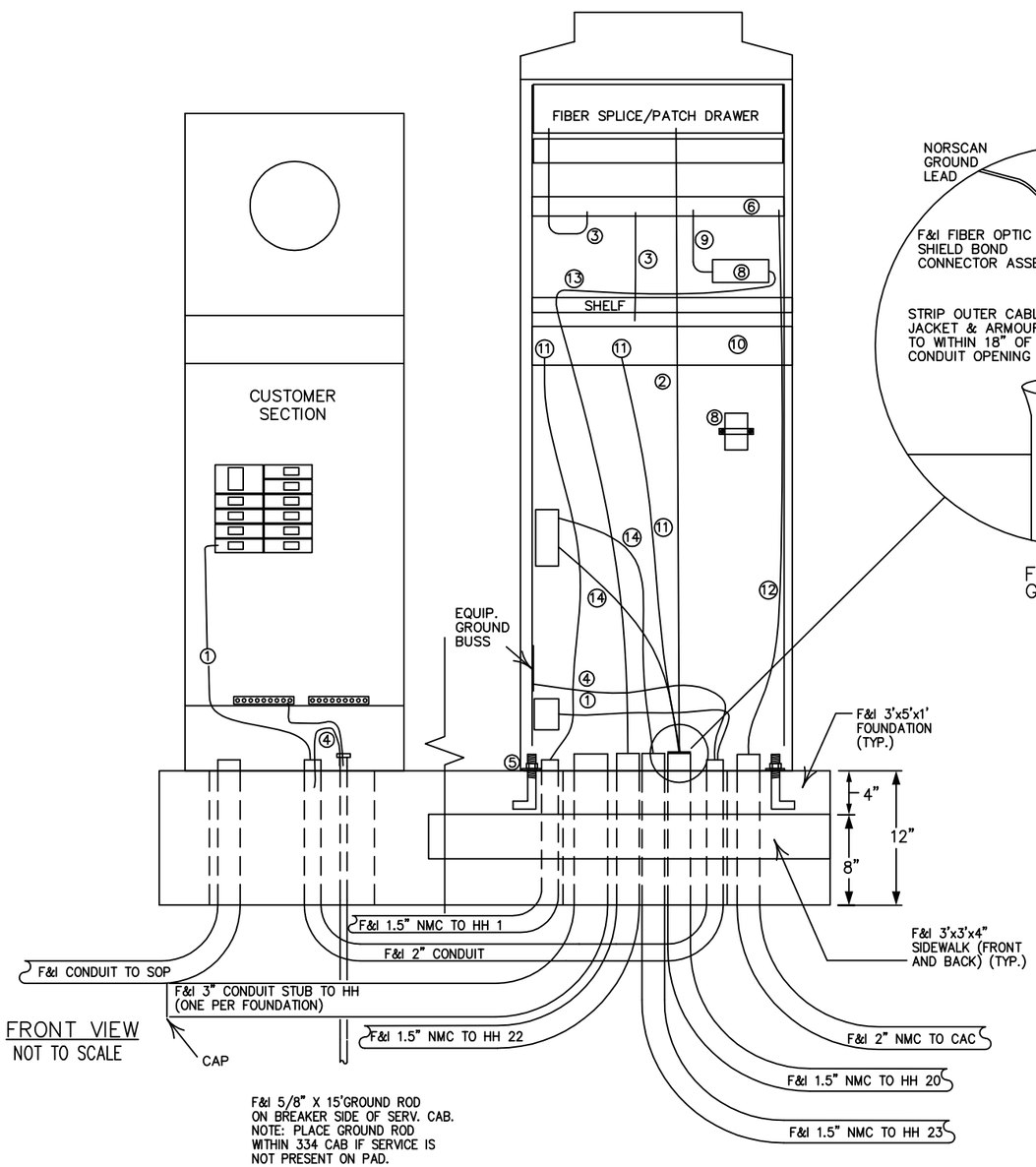


FRONT VIEW
NOT TO SCALE

TYPICAL 334 SERIES FIBER CABINET INSTALLATION

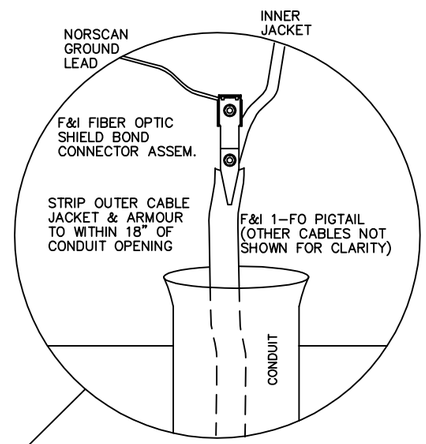


FO PIGTAIL GROUNDING

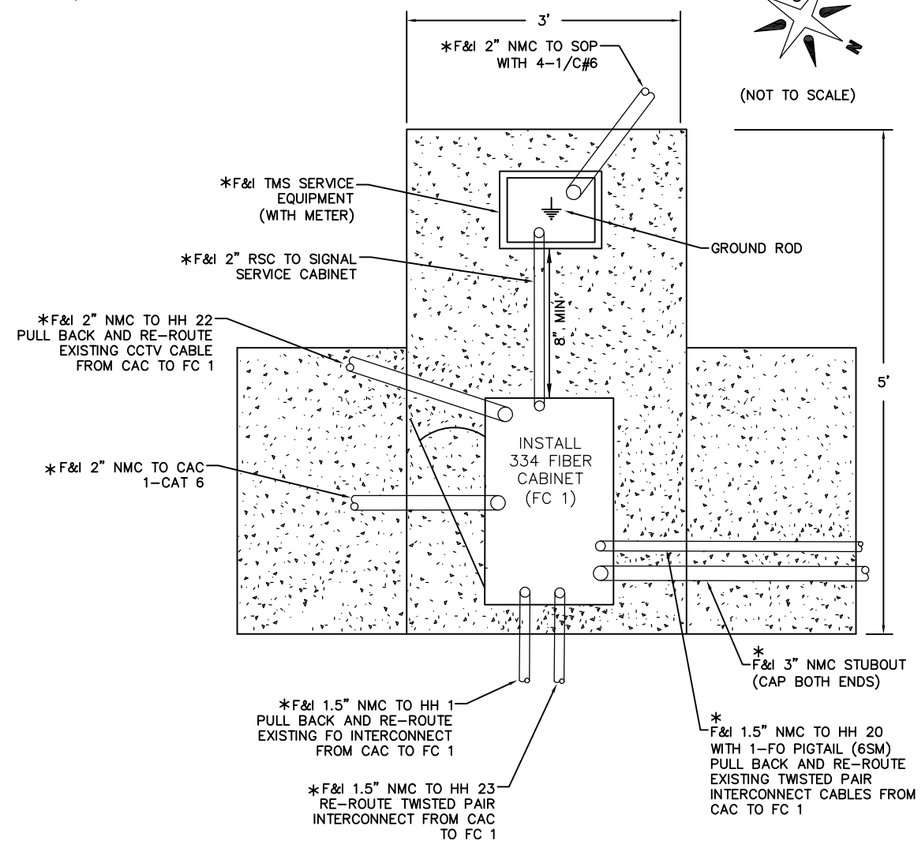


NOTES:

1. THE UPPER PART OF THE EQUIPMENT PAD SHALL BE BEVELED OR CHAMFERED IN A NEAT MANNER AS APPROVED BY THE ENGINEER.
2. THE TOP OF THE CONDUITS SHALL BE THREADED AND CAPPED AFTER INSTALLATION (UNTIL CABLES ARE INSTALLED).
3. THE LOCATION OF CONDUITS WITHIN THE CONCRETE PAD SHALL BE 6" TO THE CENTER OF THE CONDUIT FROM THE INSIDE LIP OF THE MOUNTING FLANGE ON THE DOOR SIDE OF THE CABINET. THE CONDUITS SHALL PROJECT 2" TO 3" ABOVE THE CONCRETE. THE CONDUITS SHALL NOT INTERFERE WITH THE CABINET FUNCTIONS (CONTROL EQUIPMENT, SUPPORTING MEMBERS, ETC.). FINAL CONDUIT LOCATIONS SHALL BE DIRECTED BY THE ENGINEER.
4. CONDUITS WITH BOTH ENDS TERMINATING WITHIN THE PAD SHALL NOT BE INSTALLED BELOW CONCRETE.
5. THE EXACT LOCATION OF CONDUITS WITHIN THE PAD SHALL BE DETERMINED BY THE ENGINEER IN THE FIELD.
6. A SIDEWALK OR CONCRETE AREA SHALL BE ON THE DOOR SIDE OF THE CABINET IN ALL CASES.
7. CONCRETE MIX 3Y43 OR APPROVED EQUAL SHALL BE USED FOR THE EQUIPMENT PAD AND ADJACENT SIDEWALK.
8. TOP OF EQUIPMENT PAD TO BE 12" ABOVE FINISHED GRADE. LOCATION AND ELEVATION OF EQUIPMENT PAD TOP SHALL BE STAKED BY SURVEY CREW.
9. SEE DETAIL IN PLANS FOR SP 1. REFER TO DIVISION SS (SPECIAL PROVISIONS) FOR SP 2.

S.P. 107–030–005

2013–201 WAY FINDING PROJECT

REVISE SIGNAL SYSTEM B
AMERICAN BLVD AND 24TH AVE S (CSAH 1)
334 FIBER CABINET DETAIL


CITY OF BLOOMINGTON MINNESOTA
1700 W 98TH ST. BLOOMINGTON MN 55431 PHONE (952) 563-8700
ALLIANT ENGINEERING
233 Park Ave S, Ste 300 Minneapolis, MN 55415
612.758.3080 MAIN
612.758.3099 FAX
www.alliant-inc.com


REVISIONS

| DATE | DESCRIPTION | BY |
|---|---|---|
| | | |

I HEREBY CERTIFY THAT THIS PLAN WAS PREPARED BY ME OR UNDER MY DIRECT SUPERVISION AND THAT I AM A DULY LICENSED PROFESSIONAL ENGINEER UNDER THE LAWS OF THE STATE OF MINNESOTA.

THOMAS JENSEN 44247 LIC. # 4/30/14 DATE

DRAWN: KAS
CHECKED: TJJ
APPROVED: TJJ

SHEET: 45 OF 82

Drawing name: X:\2012\120092\PlanSheets\120092-dd02.dwg -- Printed: May 16, 2014 - 12:07pm

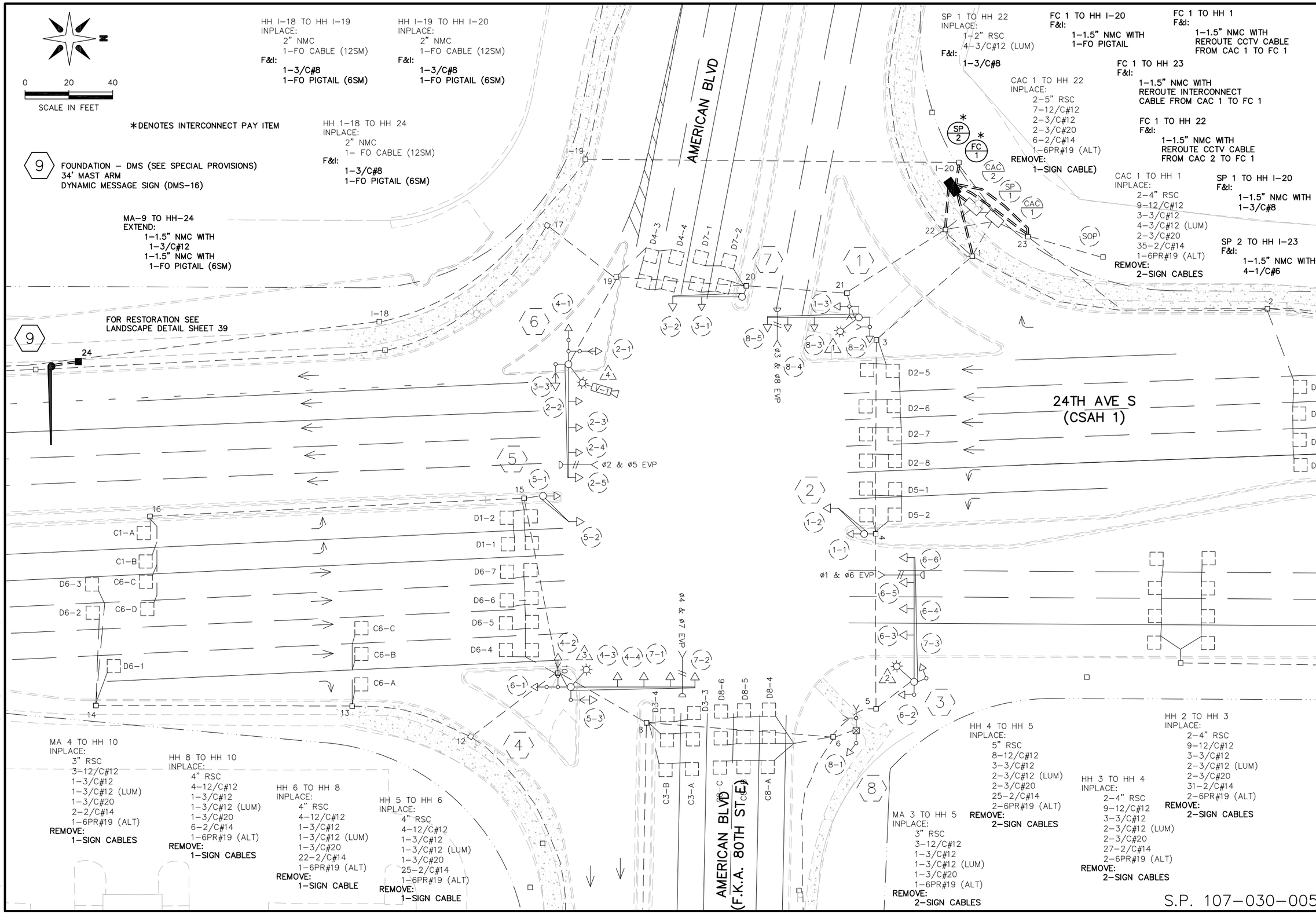


S.P. 107-030-005

# 2013-201 WAY FINDING PROJECT

## REVISE SIGNAL SYSTEM B

AMERICAN BLVD AND 24TH AVE S (CSAH 1)

INTERSECTION LAYOUT


CITY OF BLOOMINGTON MINNESOTA
1700 W 98TH ST.
BLOOMINGTON MN 55431
PHONE (952) 563-8700

ALLIANT ENGINEERING
233 Park Ave S, Ste 300
Minneapolis, MN 55415
612.758.3080 MAIN
612.758.3099 FAX
www.alliant-inc.com


REVISIONS

| DATE | DESCRIPTION | BY |
|---|---|---|
| | | |

I HEREBY CERTIFY THAT THIS PLAN WAS PREPARED BY ME OR UNDER MY DIRECT SUPERVISION AND THAT I AM A DULY LICENSED PROFESSIONAL ENGINEER UNDER THE LAWS OF THE STATE OF MINNESOTA.

THOMAS JENSEN 44247 LIC. # 4/30/14 DATE

DRAWN: KAS
CHECKED: TJJ
APPROVED: TJJ

SHEET: 46 OF 82

Drawing name: X:\2012\120092\PlanSheets\120092-sysB.dwg -- Printed: May 16, 2014 - 10:28am

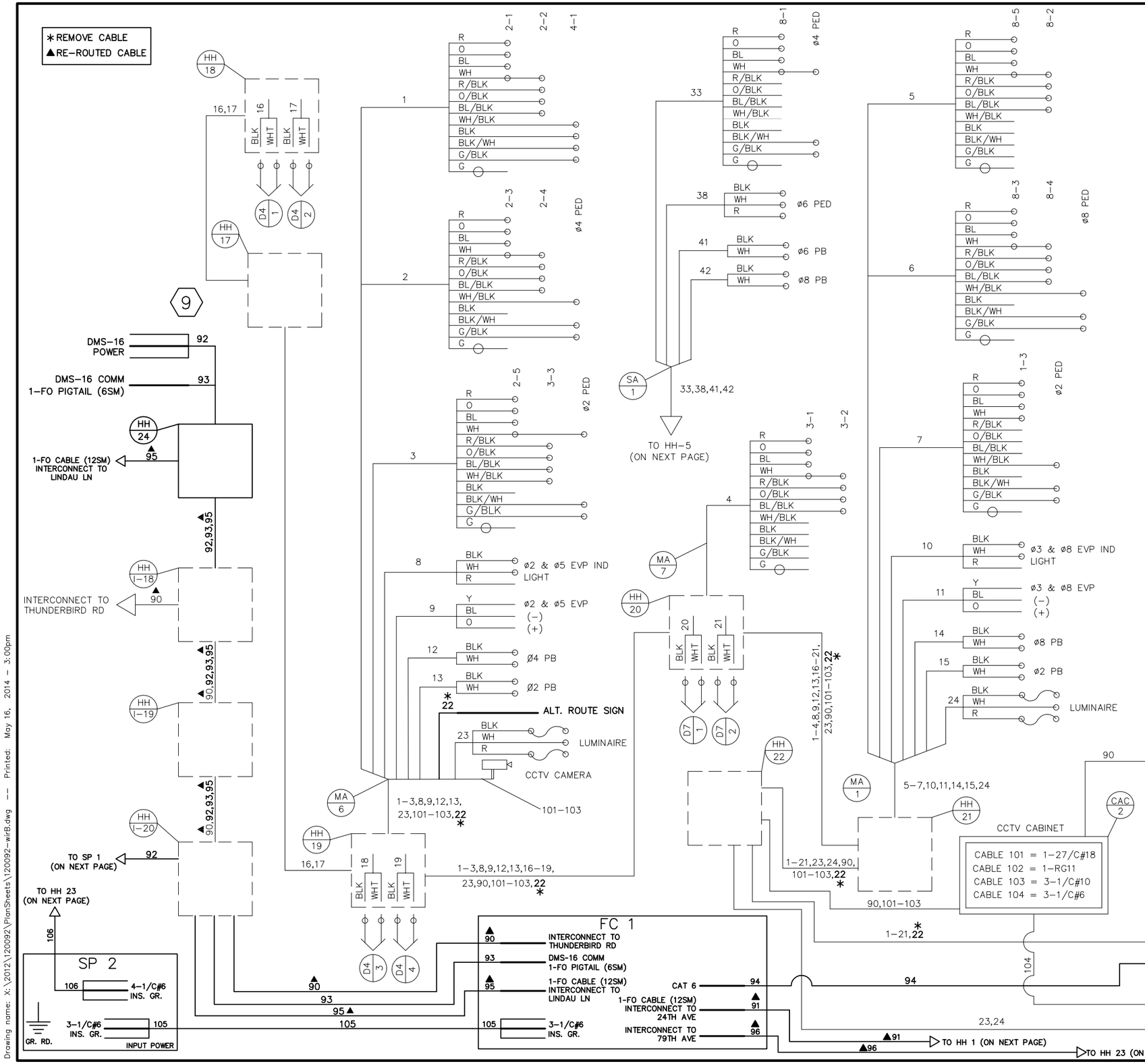


## CONTROLLER CABINET

| | | |
|---|---|---|
| 1 | R | ø2 – RED |
| | O | ø2 – YEL |
| | BL | ø2 – GRN |
| | WH | NEU |
| | R/BLK | ø2 – RED |
| | O/BLK | ø2 – YEL |
| | BL/BLK | ø2 – GRN |
| | WH/BLK | NEU |
| | BLK | ø4 – RED |
| | BLK/WH | ø4 – YEL |
| | G/BLK | ø4 – GRN |
| | G | EQG |
| 2 | R | ø2 – RED |
| | O | ø2 – YEL |
| | BL | ø2 – GRN |
| | WH | NEU |
| | R/BLK | ø2 – RED |
| | O/BLK | ø2 – YEL |
| | BL/BLK | ø2 – GRN |
| | WH/BLK | NEU |
| | BLK | SPARE |
| | BLK/WH | ø4 – DW |
| | G/BLK | ø4 – W |
| | G | EQG |
| 3 | R | ø2 – RED |
| | O | ø2 – YEL |
| | BL | ø2 – GRN |
| | WH | NEU |
| | R/BLK | ø3 – RLTA |
| | O/BLK | ø3 – YLTA |
| | BL/BLK | ø3 – GLTA |
| | WH/BLK | NEU |
| | BLK | SPARE |
| | BLK/WH | ø2 – DW |
| | G/BLK | ø2 – W |
| | G | EQG |
| 4 | R | ø3 – RLTA |
| | O | ø3 – YLTA |
| | BL | ø3 – GLTA |
| | WH | NEU |
| | R/BLK | ø3 – RLTA |
| | O/BLK | ø3 – YLTA |
| | BL/BLK | ø3 GLTA |
| | WH/BLK | NEU |
| | BLK | SPARE |
| | BLK/WH | SPARE |
| | G/BLK | SPARE |
| | G | EQG |
| 5 | R | ø8 – RED |
| | O | ø8 – YEL |
| | BL | ø8 – GRN |
| | WH | NEU |
| | R/BLK | ø8 – RED |
| | O/BLK | ø8 – YEL |
| | BL/BLK | ø8 – GRN |
| | WH/BLK | NEU |
| | BLK | SPARE |
| | BLK/WH | SPARE |
| | G/BLK | SPARE |
| | G | EQG |
| 6 | R | ø8 – RED |
| | O | ø8 – YEL |
| | BL | ø8 – GRN |
| | WH | NEU |
| | R/BLK | ø8 – RED |
| | O/BLK | ø8 – YEL |
| | BL/BLK | ø8 – GRN |
| | WH/BLK | NEU |
| | BLK | SPARE |
| | BLK/WH | ø8 – DW |
| | G/BLK | ø8 – W |
| | G | EQG |
| 7 | R | ø1 – RLTA |
| | O | ø1 – YLTA |
| | BL | ø1 – GLTA |
| | WH | NEU |
| | R/BLK | SPARE |
| | O/BLK | SPARE |
| | BL/BLK | SPARE |
| | WH/BLK | NEU |
| | BLK | SPARE |
| | BLK/WH | ø2 – DW |
| | G/BLK | ø2 – W |
| | G | EQG |
| 8 | BLK | ø2 & ø5 EVP IND LIGHT |
| | WH | NEU |
| | R | |
| 9 | Y | ø2 & ø5 EVP SYS. |
| | BL | (−) |
| | O | (+) |
| 10 | BLK | ø3 & ø8 EVP IND LIGHT |
| | WH | NEU |
| | R | |
| 11 | Y | ø3 & ø8 EVP SYS. |
| | BL | (−) |
| | O | (+) |
| 12 | BLK | ø4 – PB |
| | WH | NEU |
| 13 | BLK | ø2 – PB |
| | WH | NEU |
| 14 | BLK | ø8 – PB |
| | WH | NEU |
| 15 | BLK | ø2 – PB |
| | WH | NEU |
| 16 | BLK | D4–1 |
| | WH | |
| 17 | BLK | D4–2 |
| | WH | |
| 18 | BLK | D4–3 |
| | WH | |
| 19 | BLK | D4–4 |
| | WH | |
| 20 | BLK | D7–1 |
| | WH | |
| 21 | BLK | D7–2 |
| | WH | |
| * 22 | ALT. ROUTE SIGN | |
| ▲ 90 | INTERCONNECT TO THUNDERBIRD RD | |
| ▲ 95 | 1–FO CABLE (12SM) INTERCONNECT TO LINDAU LN | |
| ▲ 96 | INTERCONNECT TO 79TH ST | |
| 94 | CAT 6 | |

# 2013–201 WAY FINDING PROJECT

## REVISE SIGNAL SYSTEM B

AMERICAN BLVD AND 24TH AVE S (CSAH 1)

WIRING DIAGRAM – SHEET 1 OF 2


CITY OF BLOOMINGTON MINNESOTA
1700 W 98TH ST. BLOOMINGTON MN 55431 PHONE (952) 563-8700

ALLIANT ENGINEERING
233 Park Ave S, Ste 300
Minneapolis, MN 55415
612.758.3080 MAIN
612.758.3099 FAX
www.alliant-inc.com


REVISIONS

| DATE | DESCRIPTION | BY |
|---|---|---|

I HEREBY CERTIFY THAT THIS PLAN WAS PREPARED BY ME OR UNDER MY DIRECT SUPERVISION AND THAT I AM A DULY LICENSED PROFESSIONAL ENGINEER UNDER THE LAWS OF THE STATE OF MINNESOTA.

THOMAS JENSEN — LIC. # 44247 — DATE 4/30/14

DRAWN: KAS
CHECKED: TJJ
APPROVED: TJJ

SHEET: 47 OF 82

S.P. 107–030–005

Drawing name: X:\2012\120092\PlanSheets\120092-wirB.dwg -- Printed: May 16, 2014 - 3:00pm

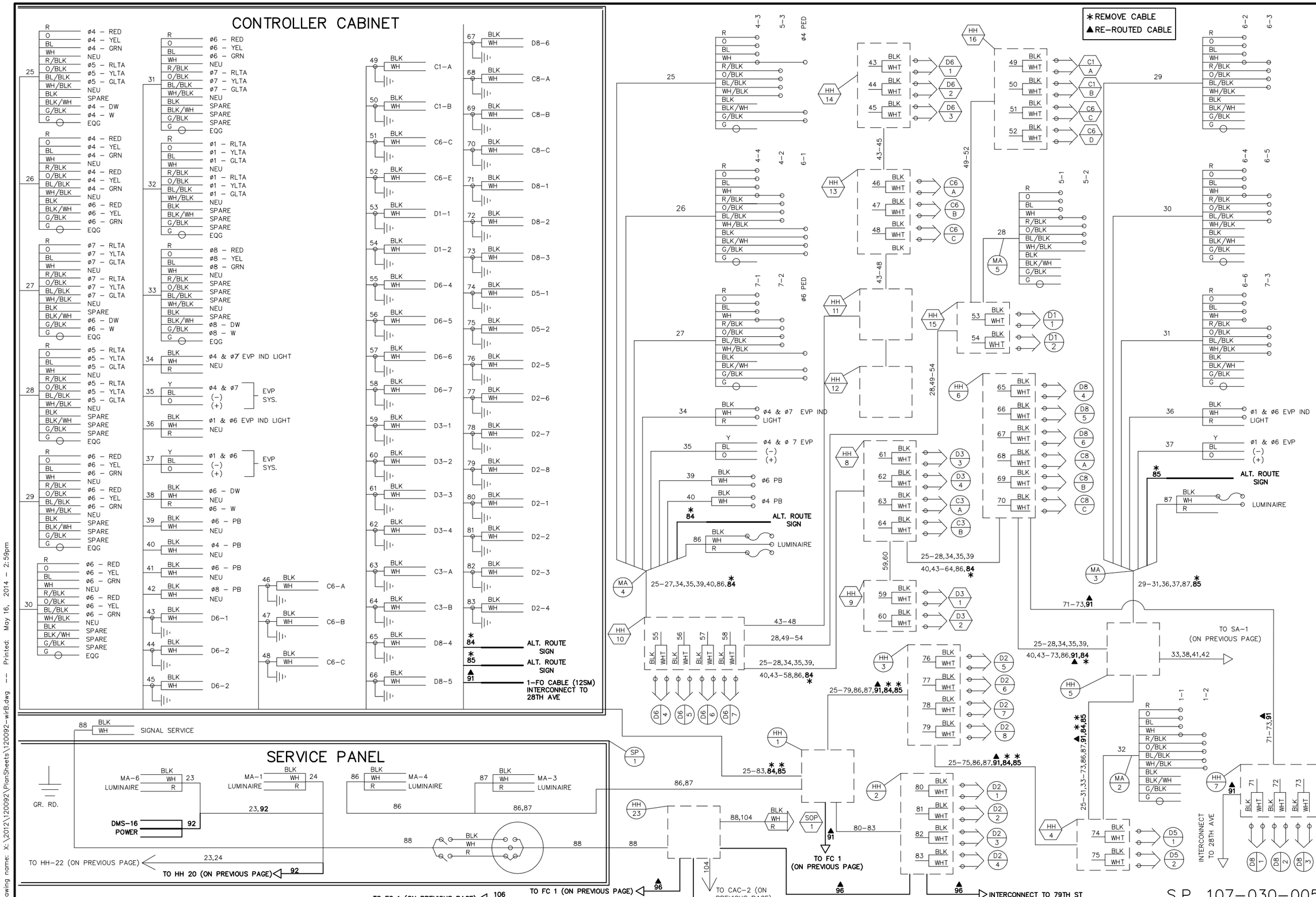


# 2013-201 WAY FINDING PROJECT

## REVISE SIGNAL SYSTEM B

AMERICAN BLVD AND 24TH AVE S (CSAH 1)

WIRING DIAGRAM – SHEET 2 OF 2


CITY OF BLOOMINGTON MINNESOTA
1700 W 98TH ST.
BLOOMINGTON MN 55431
PHONE (952) 563-8700

ALLIANT ENGINEERING
233 Park Ave S, Ste 300
Minneapolis, MN 55415
612.758.3080 MAIN
612.758.3099 FAX
www.alliant-inc.com


REVISIONS

| DATE | DESCRIPTION | BY |
|---|---|---|

I HEREBY CERTIFY THAT THIS PLAN WAS PREPARED BY ME OR UNDER MY DIRECT SUPERVISION AND THAT I AM A DULY LICENSED PROFESSIONAL ENGINEER UNDER THE LAWS OF THE STATE OF MINNESOTA.

THOMAS JENSEN

LIC. # 44247 DATE 4/30/14

DRAWN: KAS
CHECKED: TJJ
APPROVED: TJJ

S.P. 107-030-005

SHEET: 48 OF 82

Drawing name: X:\2012\120092\PlanSheets\120092-wirB.dwg -- Printed: May 16, 2014 - 2:59pm

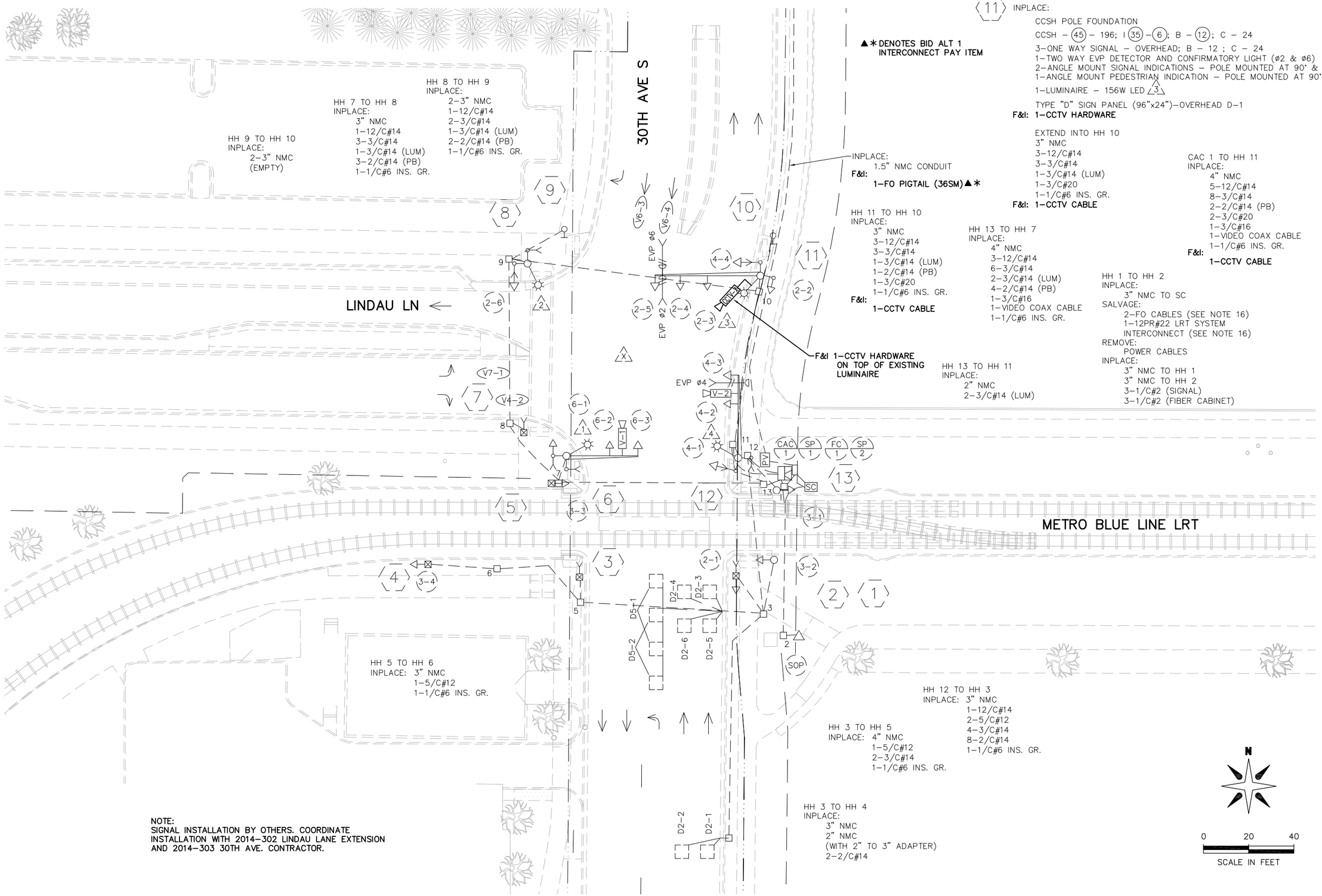


NOTE:
SIGNAL INSTALLATION BY OTHERS. COORDINATE INSTALLATION WITH 2014–302 LINDAU LANE EXTENSION AND 2014–303 30TH AVE. CONTRACTOR.

S.P. 107–030–005

# 2013–201 WAY FINDING PROJECT

## REVISE SIGNAL SYSTEM C

LINDAU LN AND 30TH AVE S

INTERSECTION LAYOUT


CITY OF BLOOMINGTON MINNESOTA
1700 W 98TH ST.
BLOOMINGTON MN 55431
PHONE (952) 563-8700

ALLIANT ENGINEERING
233 Park Ave S, Ste 300
Minneapolis, MN 55415
612.758.3080 MAIN
612.758.3099 FAX
www.alliant–inc.com


REVISIONS

| DATE | DESCRIPTION | BY |
|---|---|---|
| | | |

I HEREBY CERTIFY THAT THIS PLAN WAS PREPARED BY ME OR UNDER MY DIRECT SUPERVISION AND THAT I AM A DULY LICENSED PROFESSIONAL ENGINEER UNDER THE LAWS OF THE STATE OF MINNESOTA.

THOMAS JENSEN 44247 4/30/14
LIC. # DATE

DRAWN: KAS
CHECKED: TJJ
APPROVED: TJJ

SHEET:
49 OF 82

Drawing name: X:\2012\120092\PlanSheets\120092–sysC.dwg -- Printed: May 16, 2014 – 2:39pm

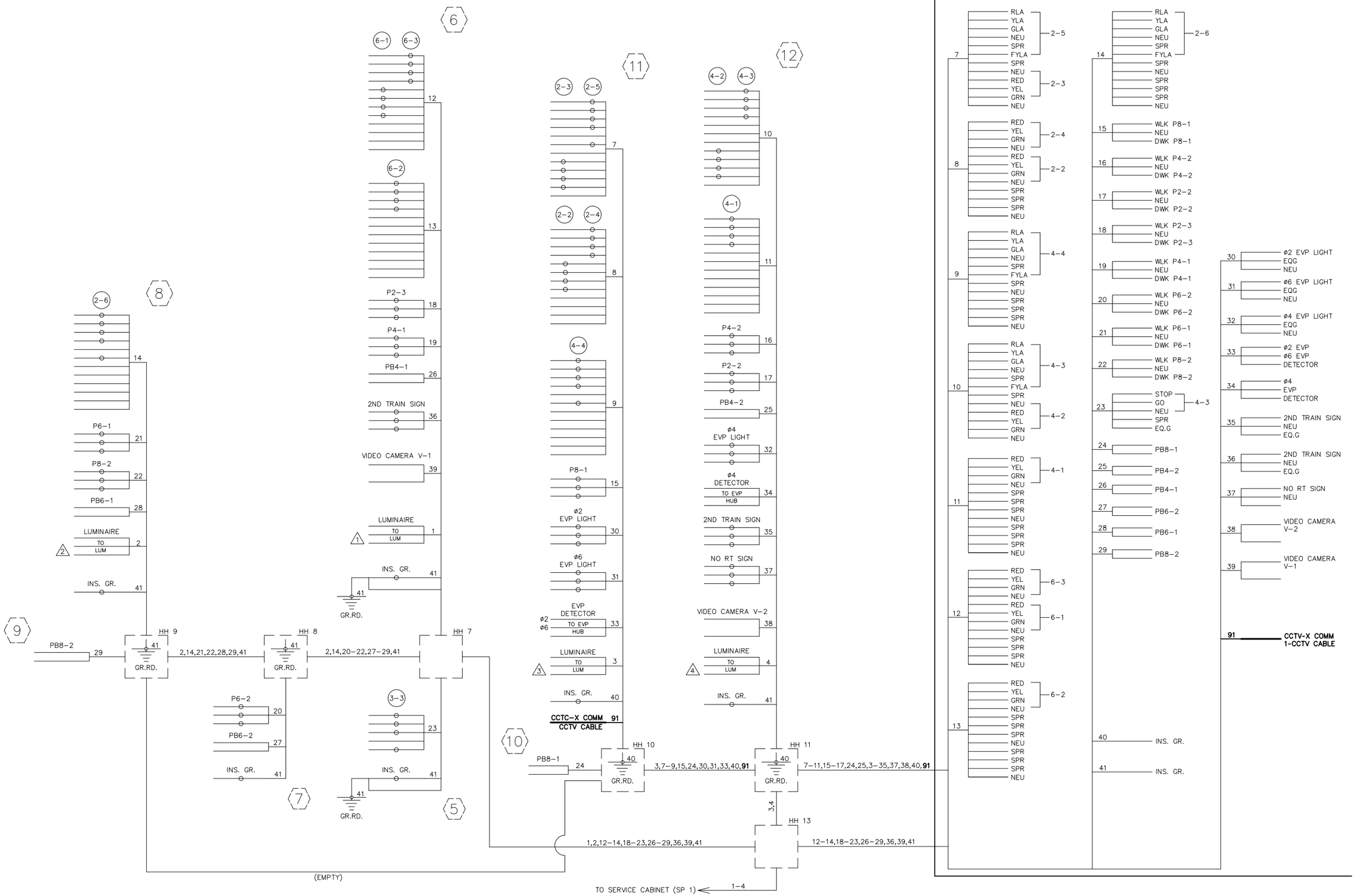


2013-201 WAY FINDING PROJECT

REVISE SIGNAL SYSTEM C

LINDAU LN AND 30TH AVE S

WIRING DIAGRAM - SHEET 1 OF 2

CITY OF BLOOMINGTON MINNESOTA
1700 W 98TH ST.
BLOOMINGTON MN 55431
PHONE (952) 563-8700

ALLIANT ENGINEERING
233 Park Ave S, Ste 300
Minneapolis, MN 55415
612.758.3080 MAIN
612.758.3099 FAX
www.alliant-inc.com

REVISIONS

| DATE | DESCRIPTION | BY |
|---|---|---|

I HEREBY CERTIFY THAT THIS PLAN WAS PREPARED BY ME OR UNDER MY DIRECT SUPERVISION AND THAT I AM A DULY LICENSED PROFESSIONAL ENGINEER UNDER THE LAWS OF THE STATE OF MINNESOTA.

THOMAS JENSEN 44247 LIC. # 4/30/14 DATE

DRAWN: KAS
CHECKED: TJJ
APPROVED: TJJ

SHEET: 50 OF 82

Drawing name: X:\2012\120092\PlanSheets\120092-wirC.dwg -- Printed: May 16, 2014 - 3:01pm

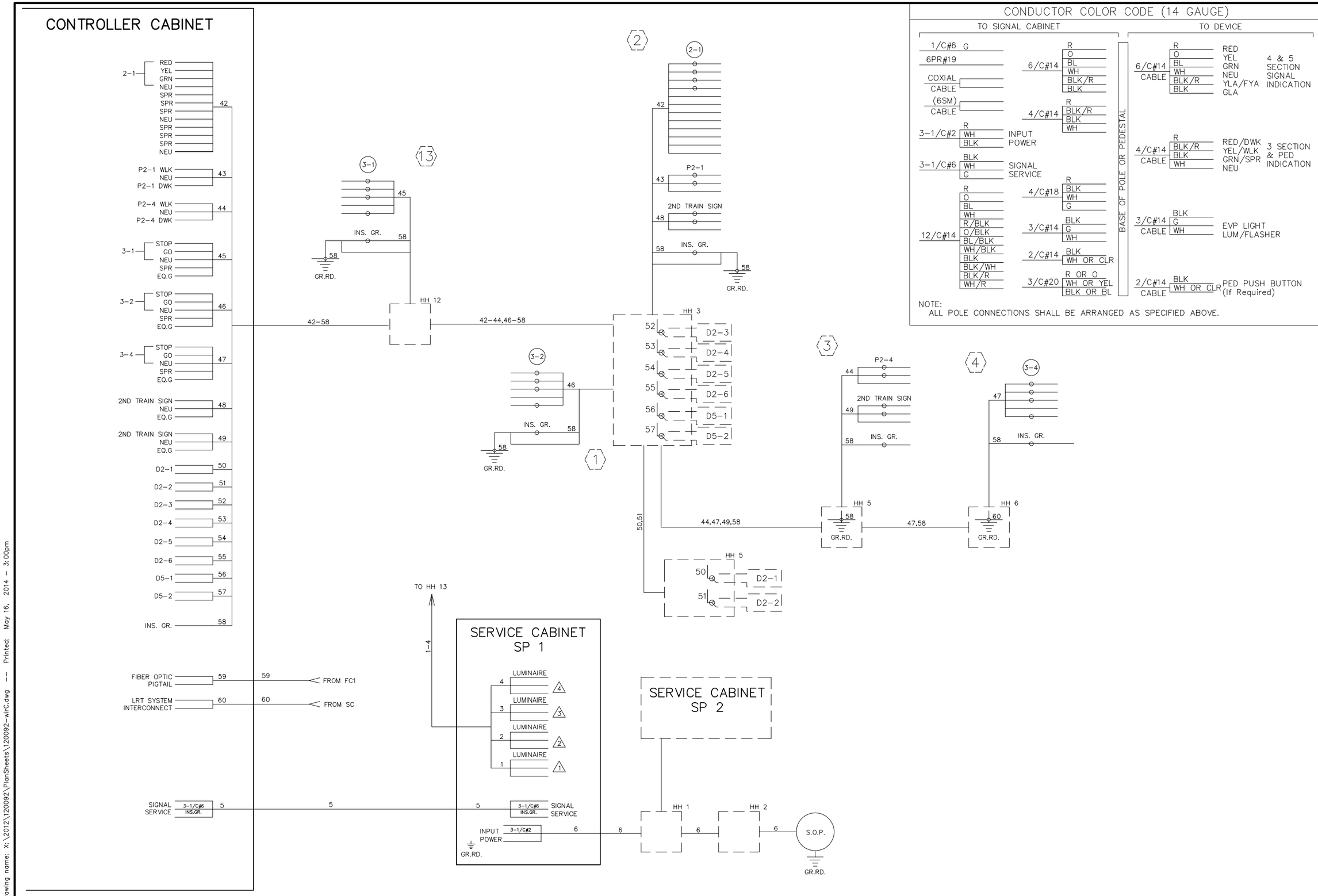


## CONDUCTOR COLOR CODE (14 GAUGE)

| TO SIGNAL CABINET | | | TO DEVICE | | |
|---|---|---|---|---|---|
| 1/C#6 G | | | 6/C#14 CABLE | R, O, BL, WH, BLK/R, BLK | RED, YEL, GRN, NEU, YLA/FYA, GLA — 4 & 5 SECTION SIGNAL INDICATION |
| 6PR#19 | | | | | |
| COXIAL CABLE | 6/C#14 | R, O, BL, WH, BLK/R, BLK | | | |
| (6SM) CABLE | 4/C#14 | R, BLK/R, BLK, WH | 4/C#14 CABLE | R, BLK/R, BLK, WH | RED/DWK, YEL/WLK, GRN/SPR, NEU — 3 SECTION & PED INDICATION |
| 3-1/C#2 | R, WH, BLK | INPUT POWER | | | |
| 3-1/C#6 | BLK, WH, G | SIGNAL SERVICE | | | |
| 12/C#14 | R, O, BL, WH, R/BLK, O/BLK, BL/BLK, WH/BLK, BLK, BLK/WH, BLK/R, WH/R | | 4/C#18 | R, BLK, WH, G | |
| | | | 3/C#14 | BLK, G, WH | |
| | | | 2/C#14 | BLK, WH OR CLR | |
| | | | 3/C#20 | R OR O, WH OR YEL, BLK OR BL | |
| | | | 3/C#14 CABLE | BLK, G, WH | EVP LIGHT LUM/FLASHER |
| | | | 2/C#14 CABLE | BLK, WH OR CLR | PED PUSH BUTTON (If Required) |

BASE OF POLE OR PEDESTAL

NOTE:
ALL POLE CONNECTIONS SHALL BE ARRANGED AS SPECIFIED ABOVE.

# 2013-201 WAY FINDING PROJECT

REVISE SIGNAL SYSTEM C

LINDAU LN AND 30TH AVE S

WIRING DIAGRAM - SHEET 2 OF 2


CITY OF BLOOMINGTON MINNESOTA
1700 W 98TH ST.
BLOOMINGTON MN 55431
PHONE (952) 563-8700

ALLIANT ENGINEERING
233 Park Ave S, Ste 300
Minneapolis, MN 55415
612.758.3080 MAIN
612.758.3099 FAX
www.alliant-inc.com


REVISIONS

| DATE | DESCRIPTION | BY |
|---|---|---|
| | | |

I HEREBY CERTIFY THAT THIS PLAN WAS PREPARED BY ME OR UNDER MY DIRECT SUPERVISION AND THAT I AM A DULY LICENSED PROFESSIONAL ENGINEER UNDER THE LAWS OF THE STATE OF MINNESOTA.

THOMAS JENSEN 44247 4/30/14
LIC. # DATE

DRAWN: KAS
CHECKED: TJJ
APPROVED: TJJ

SHEET:
51 OF 82

Drawing name: X:\2012\120092\PlanSheets\120092-wirC.dwg -- Printed: May 16, 2014 - 3:00pm

SP 1 TO HH 20
INPLACE:
1–2" RSC
2–3/C#12 (LUM)
F&I:
1–3/C#8

HH 20 TO HH 18
INPLACE:
2–3" RSC
4–12/C#12
2–3/C#20
4–3/C#12
2–3/C#12 (LUM)
2–3/C#16 (VIDEO POWER)
2–VIDEO COAX
3–2/C#14
1–12/C FO CABLE
F&I:
1–3/C#8
1–FO PIGTAIL (6SM)
1–CCTV CABLE

SP 1 TO HH 1
INPLACE:
1–2" RSC
2–3/C#12 (LUM)
3–1/C#2
F&I:
1–3/C#8

CAC 1 TO HH 20
INPLACE:
2–3" RSC
4–12/C#12
2–3/C#20
4–3/C#12
2–3/C#16 (VIDEO POWER)
2–VIDEO COAX
3–2/C#14
1–12/C FO CABLE
F&I:
1–FO PIGTAIL (6SM)
1–CCTV CABLE

CAC 1 TO HH 1
INPLACE:
2–3" RSC
5–12/C#12
1–3/C#20
7–3/C#12
1–3/C#16 (VIDEO POWER)
1–VIDEO COAX
5–2/C#14
F&I:
1–FO PIGTAIL (6SM)

HH 1 TO HH 5
INPLACE:
2–3" RSC
5–12/C#12
1–3/C#20
7–3/C#12
1–3/C#16 (VIDEO POWER)
2–3/C#12 (LUM)
1–VIDEO COAX
5–2/C#14
3–1/C#2
F&I:
1–3/C#8
1–FO PIGTAIL (6SM)

F&I 1–6 POSITION TERMINATION PANEL
F&I 1–FO PIGTAIL TERMINATION

HH 5 TO HH 7
INPLACE:
1–4" RSC
1–3" RSC (LIGHTING)
1–2" RSC (INTERCONNECT)
3–12/C#12
6–3/C#12
1–3/C#12 (LUM)
3–2/C#14
3–1/C#2
F&I:
1–3/C#8
1–FO PIGTAIL (6SM)

HH 7 TO HH 8
INPLACE:
1–4" RSC
1–3" RSC (LIGHTING)
1–2" RSC (INTERCONNECT)
3–12/C#12
6–3/C#12
1–3/C#12 (LUM)
3–2/C#14
3–1/C#2
F&I:
1–3/C#8
1–FO PIGTAIL (6SM)

HH 8 TO HH 9
INPLACE:
1–3" RSC
3–2/C#14
1–2" RSC (EMPTY)
1–2" RSC (LIGHTING)
3–1/C#2
F&I:
1–3/C#8
1–FO PIGTAIL (6SM)

HH 9 TO HH 10
INPLACE:
1–3" RSC
3–2/C#14
1–2" RSC (EMPTY)
1–2" RSC (LIGHTING)
3–1/C#2
F&I:
1–3/C#8
1–FO PIGTAIL (6SM)

HH 10 TO HH 11
INPLACE:
1–3" RSC (EMPTY)
F&I:
1–3/C#8
1–FO PIGTAIL (6SM)

N

0 20 40
SCALE IN FEET

MATCH LINE – SEE SHEET 53

20TH AVE S

KILLEBREW DR

SOUTH FRONTAGE RD

SWB 1
SWB 2
SWB 3

D2–3
D2–2
D2–1

D 4–1
D 4–2
D4–3
D4–4
D4–5
D4–6
C7–1
C6–1
C6–2
C6–3
C6–4
D6–1
D6–2
D6–3
V–1
ø6 EVP
V–2
ø2 & ø5 EVP
V–3
ø4 EVP
CAC 1
SP 1
SOP

F&I 1–CCTV HARDWARE ON TOP OF EXISTING LUMINAIRE

HH 11 TO MA 8
F&I:
1–1.5" NMC WITH
1–3/C#8
1–1.5" NMC WITH
1–FO PIGTAIL (6SM)

HH 16 TO HH 21
INPLACE:
1–3" RSC
3–2/C#14
F&I:
1–3/C#8
1–FO PIGTAIL (6SM)

HH 15 TO HH 16
INPLACE:
1–3" RSC
3–2/C#14
F&I:
1–3/C#8
1–FO PIGTAIL (6SM)

4 POLE FOUNDATION
3–ONE WAY SIGNALS–OVERHEAD
2–ANGLE MOUNT SIGNAL INDICTIONS–POLE MOUNTED AT 90° AND 180°
ONE WAY EVP DETECTOR AND CONFIRMATORY LIGHT OVERHEAD (O2 +O5)
1–LUMINAIRE
1–VIDEO DETECTION UNIT (V–2) MAST ARM MOUNTED
F&I: 1–CCTV HARDWARE

EXTEND TO HH 14:
1–3" RSC
2–12/C#12
1–3/C#20
3–3/C#12
1–3/C#12 (LUM)
1–3/C#16 (VIDEO POWER)
1–VIDEO COAX
F&I: 1–CCTV CABLE

8 FOUNDATION – DMS (SEE SPECIAL PROVISIONS)
34' MAST ARM
DYNAMIC MESSAGE SIGN (DMS–5)

HH 18 TO HH 15
INPLACE:
2–3" RSC
4–12/C#12
2–3/C#20
4–3/C#12
2–3/C#12 (LUM)
2–3/C#16 (VIDEO POWER)
2–VIDEO COAX
3–2/C#14
1–12/C FO CABLE
F&I:
1–3/C#8
1–FO PIGTAIL (6SM)
1–CCTV CABLE

HH 15 TO HH 14
INPLACE:
1–3" RSC
2–12/C#12
1–3/C#20
3–3/C#12
1–3/C#12 (LUM)
1–3/C#16 (VIDEO POWER)
1–VIDEO COAX
3–2/C#14
1–12/C FO CABLE
F&I:
1–CCTV CABLE

HH 14 TO MA 4
INPLACE:
1–3" RSC
2–12/C#12
1–3/C#20
3–3/C#12
1–3/C#12 (LUM)
1–3/C#16 (VIDEO POWER)
1–VIDEO COAX
F&I:
1–CCTV CABLE

S.P. 107–030–005

# 2013–201 WAY FINDING PROJECT

## REVISE SIGNAL SYSTEM D

KILLEBREW DR AND 20TH AVE S
INTERSECTION LAYOUT


CITY OF BLOOMINGTON MINNESOTA
1700 W 98TH ST.
BLOOMINGTON MN 55431
PHONE (952) 563-8700

ALLIANT ENGINEERING
233 Park Ave S, Ste 300
Minneapolis, MN 55415
612.758.3080 MAIN
612.758.3099 FAX
www.alliant–inc.com


REVISIONS

| DATE | DESCRIPTION | BY |
|---|---|---|
| | | |

I HEREBY CERTIFY THAT THIS PLAN WAS PREPARED BY ME OR UNDER MY DIRECT SUPERVISION AND THAT I AM A DULY LICENSED PROFESSIONAL ENGINEER UNDER THE LAWS OF THE STATE OF MINNESOTA.

THOMAS JENSEN 44247 4/30/14
LIC. # DATE

DRAWN: KAS
CHECKED: TJJ
APPROVED: TJJ

SHEET:
52 OF 82

Drawing name: X:\2012\120092\PlanSheets\120092–sys0.dwg -- Printed: May 16, 2014 – 2:42pm

7 FOUNDATION – DMS (SEE SPECIAL PROVISIONS)
30' MAST ARM
DYNAMIC MESSAGE SIGN (DMS–3)

N

0 20 40
SCALE IN FEET

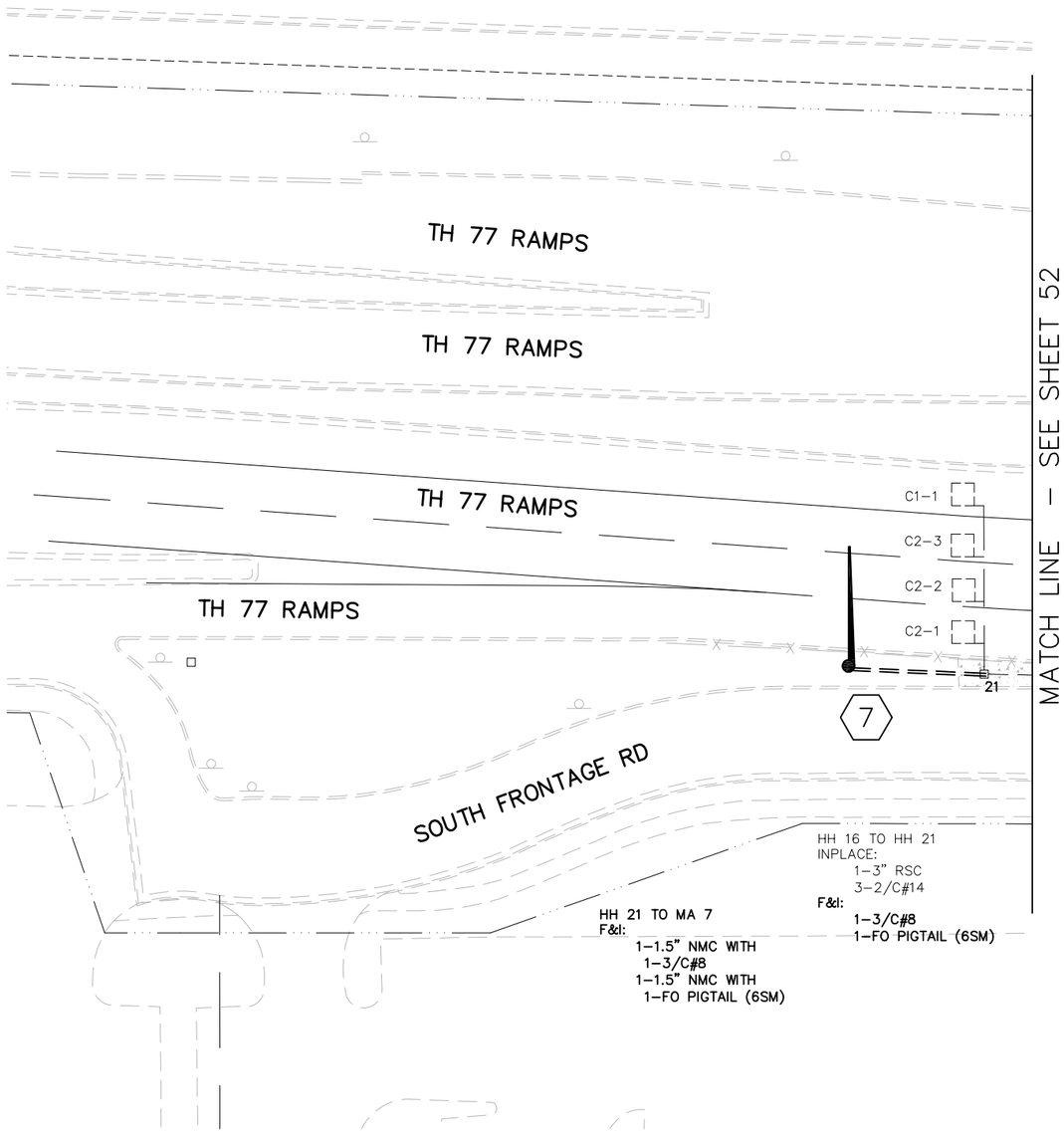


NOTE:

KILLEBREW DR AND SOUTH FRONTAGE RD TO BE OVERLAID. COORDINATE CONSTRUCTION ACTIVITIES WITH OTHER CONTRACTOR.

S.P. 107–030–005

2013–201 WAY FINDING PROJECT

REVISE SIGNAL SYTEM D
KILLEBREW DR AND 20TH AVE S
INTERSECTION LAYOUT MATCHLINES


CITY OF BLOOMINGTON MINNESOTA
1700 W 98TH ST.
BLOOMINGTON MN 55431
PHONE (952) 563-8700

ALLIANT ENGINEERING
233 Park Ave S, Ste 300
Minneapolis, MN 55415
612.758.3080 MAIN
612.758.3099 FAX
www.alliant–inc.com


REVISIONS

| DATE | DESCRIPTION | BY |
|---|---|---|
| | | |

I HEREBY CERTIFY THAT THIS PLAN WAS PREPARED BY ME OR UNDER MY DIRECT SUPERVISION AND THAT I AM A DULY LICENSED PROFESSIONAL ENGINEER UNDER THE LAWS OF THE STATE OF MINNESOTA.

THOMAS JENSEN 44247 4/30/14
LIC. # DATE

DRAWN: KAS
CHECKED: TJJ
APPROVED: TJJ

SHEET:
53 OF 82

Drawing name: X:\2012\120092\PlanSheets\120092–sysD.dwg -- Printed: May 16, 2014 – 2:41pm

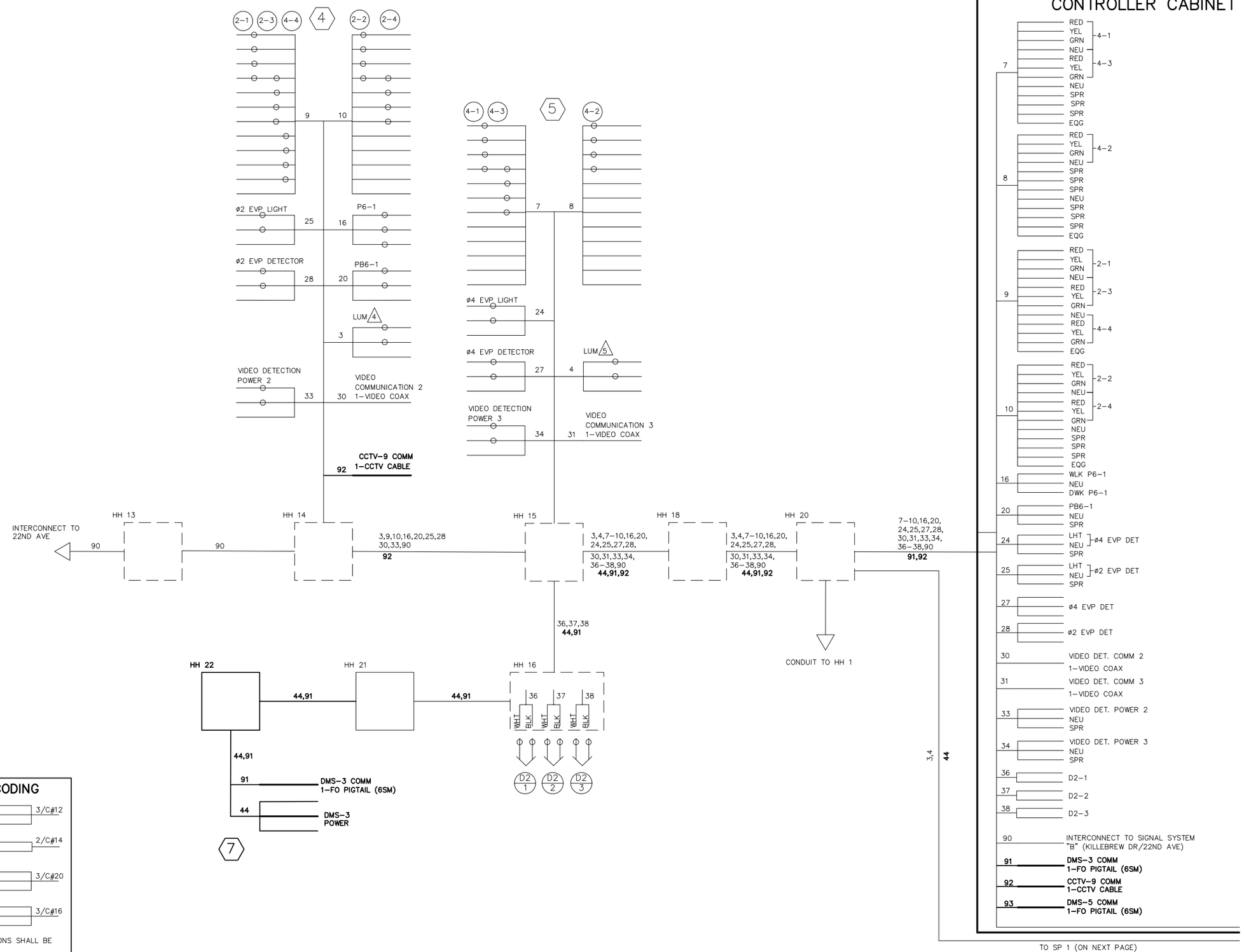


## CONDUCTOR COLOR CODING

12/C#12: R, O, BL, WH, R/BLK, O/BLK, BL/BLK, WH/BLK, BLK, BLK/WH, G/BLK, G

3/C#12: R, WH, BLK

2/C#14: BLK, CLR

3/C#20: O, YEL, BL

3/C#16: BLK, WH, G

NOTE: ALL TERMINAL BLOCK CONNECTIONS SHALL BE ARRANGED AS SPECIFIED

# 2013-201 WAY FINDING PROJECT

## REVISE SIGNAL SYSTEM D

KILLEBREW DR AND 20TH AVE S

WIRING DIAGRAM - SHEET 1 OF 2


CITY OF BLOOMINGTON MINNESOTA
1700 W 98TH ST.
BLOOMINGTON MN 55431
PHONE (952) 563-8700

ALLIANT ENGINEERING
233 Park Ave S, Ste 300
Minneapolis, MN 55415
612.758.3080 MAIN
612.758.3099 FAX
www.alliant-inc.com


REVISIONS

| DATE | DESCRIPTION | BY |
|---|---|---|
| | | |

I HEREBY CERTIFY THAT THIS PLAN WAS PREPARED BY ME OR UNDER MY DIRECT SUPERVISION AND THAT I AM A DULY LICENSED PROFESSIONAL ENGINEER UNDER THE LAWS OF THE STATE OF MINNESOTA.

THOMAS JENSEN

44247 4/30/14
LIC. # DATE

DRAWN: KAS
CHECKED: TJJ
APPROVED: TJJ

SHEET: 54 OF 82

S.P. 107-030-005


Drawing name: X:\2012\120092\PlanSheets\120092-wir0.dwg -- Printed: May 16, 2014 - 3:02pm

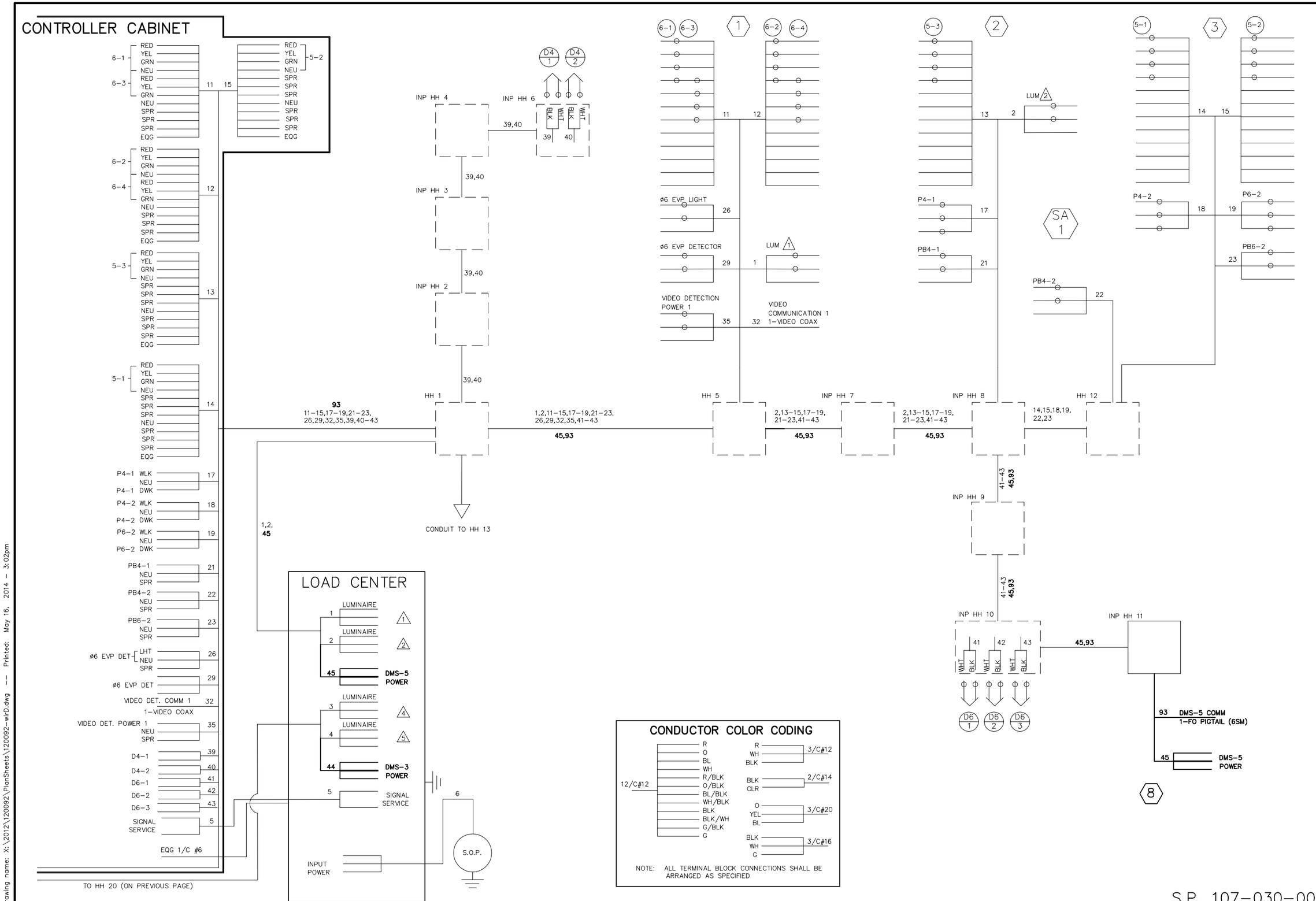


# 2013-201 WAY FINDING PROJECT

## REVISE SIGNAL SYSTEM D

KILLEBREW DR AND 20TH AVE S

WIRING DIAGRAM - SHEET 2 OF 2


CITY OF BLOOMINGTON MINNESOTA
1700 W 98TH ST. BLOOMINGTON MN 55431 PHONE (952) 563-8700

ALLIANT ENGINEERING
233 Park Ave S, Ste 300
Minneapolis, MN 55415
612.758.3080 MAIN
612.758.3099 FAX
www.alliant-inc.com


REVISIONS

| DATE | DESCRIPTION | BY |
|---|---|---|
| | | |

I HEREBY CERTIFY THAT THIS PLAN WAS PREPARED BY ME OR UNDER MY DIRECT SUPERVISION AND THAT I AM A DULY LICENSED PROFESSIONAL ENGINEER UNDER THE LAWS OF THE STATE OF MINNESOTA.

THOMAS JENSEN 44247 4/30/14
LIC. # DATE

DRAWN: KAS
CHECKED: TJJ
APPROVED: TJJ

SHEET: 55 OF 82

S.P. 107-030-005

Drawing name: X:\2012\120092\PlanSheets\120092-wirD.dwg -- Printed: May 16, 2014 - 3:02pm

1. F&I POWER CABLE FROM SOURCE OF POWER – TERMINATE AT TERMINAL BLOCK*
2. F&I 1–FO PIGTAIL TO DMS. PLACE 30' SLACK LOOP OF PIGTAIL CABLE WITHIN CABINET AGAINST SIDEWALL. CONNECT ARMOUR TO NORSCAN DEVICE – TERMINATE END & LAND IN PATCH PANEL
3. F&I FIBER OPTIC PATCH CORD(S)*
4. F&I 1–1/C NO. 6 BARE GROUND WIRE – COAT CONNECTION WITH ANTI–OXIDIZING AGENT*
5. INSTALL NEOPRENE GASKET (CITY PROVIDED)*
6. INSTALL COMMUNICATION EQUIPMENT (CITY PROVIDED)*
7. SHEATH GROUNDING UNIT
8. RELOCATE CCTV POWER SUPPLY FROM CAC TO FC 1*
9. F&I CAT 6 PATCH CABLE(S)*
10. F&I 1–48 POSITION SPLICE/PATCH PANEL*
11. PULL BACK AND RE–ROUTE EXISTING FO INTERCONNECT FROM CAC TO FC 1. PLACE SLACK LOOP OF CABLE AGAINST SIDEWALL. TERMINATE END AND LAND IN PATCH PANEL.*
12. F&I 1–FO PIGTAIL TO DMS. PLACE 30' SLACK LOOP OF PIGTIAL CABLE WITHIN CABINET AGAINST SIDEWALL. CONNECT ARMOUR TO NORSCAN DEVICE – TERMINATE END & LAND IN PATCH PANEL▲
13. CAP 1.5" CONDUIT IF BID ALTERNATIVE 1 IS NOT SELECTED*
14. PULL BACK AND RE–ROUTE EXISTING CCTV CABLE FROM CAC TO FC 1*
15. F&I 1–CAT TO CAC. TERMINATE BOTH ENDS*

* DENOTES INTERCONNECT PAY ITEM

▲ DENOTES BID ALTERNATIVE 1 INTERCONNECT PAY ITEM

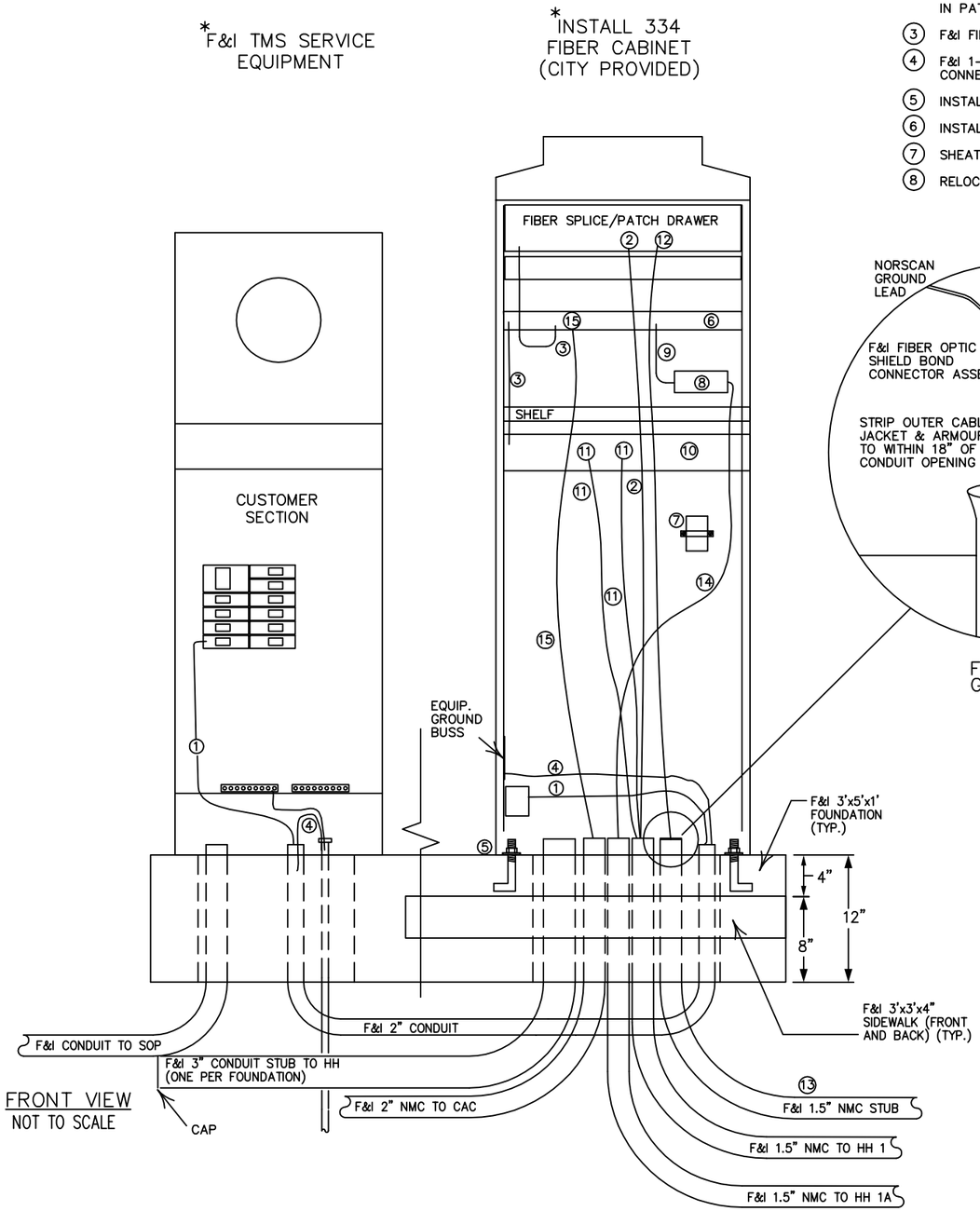


F&I 5/8" X 15'GROUND ROD ON BREAKER SIDE OF SERV. CAB. NOTE: PLACE GROUND ROD WITHIN 334 CAB IF SERVICE IS NOT PRESENT ON PAD.

TYPICAL 334 SERIES FIBER CABINET INSTALLATION

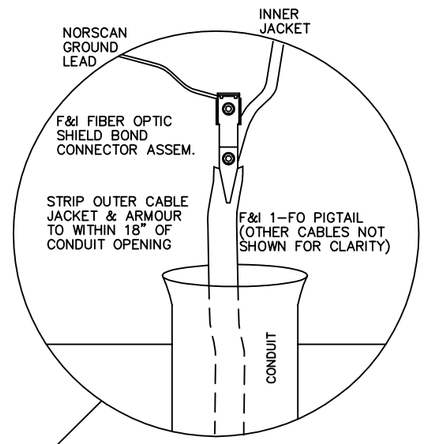


FO PIGTAIL GROUNDING

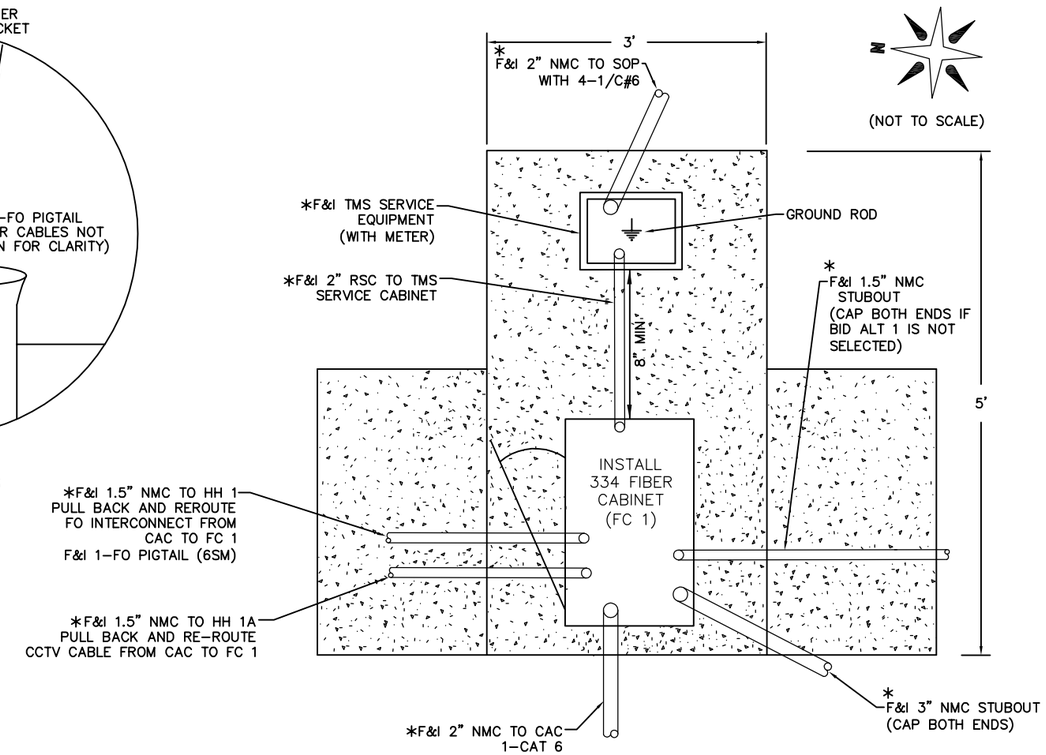


NOTES:

1. THE UPPER PART OF THE EQUIPMENT PAD SHALL BE BEVELED OR CHAMFERED IN A NEAT MANNER AS APPROVED BY THE ENGINEER.
2. THE TOP OF THE CONDUITS SHALL BE THREADED AND CAPPED AFTER INSTALLATION (UNTIL CABLES ARE INSTALLED).
3. THE LOCATION OF CONDUITS WITHIN THE CONCRETE PAD SHALL BE 6" TO THE CENTER OF THE CONDUIT FROM THE INSIDE LIP OF THE MOUNTING FLANGE ON THE DOOR SIDE OF THE CABINET. THE CONDUITS SHALL PROJECT 2" TO 3" ABOVE THE CONCRETE. THE CONDUITS SHALL NOT INTERFERE WITH THE CABINET FUNCTIONS (CONTROL EQUIPMENT, SUPPORTING MEMBERS, ETC.). FINAL CONDUIT LOCATIONS SHALL BE DIRECTED BY THE ENGINEER.
4. CONDUITS WITH BOTH ENDS TERMINATING WITHIN THE PAD SHALL NOT BE INSTALLED BELOW CONCRETE.
5. THE EXACT LOCATION OF CONDUITS WITHIN THE PAD SHALL BE DETERMINED BY THE ENGINEER IN THE FIELD.
6. A SIDEWALK OR CONCRETE AREA SHALL BE ON THE DOOR SIDE OF THE CABINET IN ALL CASES.
7. CONCRETE MIX 3Y43 OR APPROVED EQUAL SHALL BE USED FOR THE EQUIPMENT PAD AND ADJACENT SIDEWALK.
8. TOP OF EQUIPMENT PAD TO BE 12" ABOVE FINISHED GRADE. LOCATION AND ELEVATION OF EQUIPMENT PAD TOP SHALL BE STAKED BY SURVEY CREW.
9. SEE DETAIL IN PLANS FOR SP 1. REFER TO DIVISION SS (SPECIAL PROVISIONS) FOR SP 2.

S.P. 107–030–005

2013–201 WAY FINDING PROJECT

REVISE SIGNAL SYSTEM E

KILLEBREW DR AND OLD SHAKOPEE RD

334 FIBER CABINET DETAIL


CITY OF BLOOMINGTON MINNESOTA
1700 W 98TH ST. BLOOMINGTON MN 55431 PHONE (952) 563-8700

ALLIANT ENGINEERING
233 Park Ave S, Ste 300
Minneapolis, MN 55415
612.758.3080 MAIN
612.758.3099 FAX
www.alliant–inc.com


REVISIONS

| DATE | DESCRIPTION | BY |
|---|---|---|
| | | |

I HEREBY CERTIFY THAT THIS PLAN WAS PREPARED BY ME OR UNDER MY DIRECT SUPERVISION AND THAT I AM A DULY LICENSED PROFESSIONAL ENGINEER UNDER THE LAWS OF THE STATE OF MINNESOTA.

THOMAS JENSEN 44247 LIC. # 4/30/14 DATE

DRAWN: KAS
CHECKED: TJJ
APPROVED: TJJ

SHEET: 56 OF 82

Drawing name: X:\2012\120092\PlanSheets\120092–dd02.dwg -- Printed: May 16, 2014 – 12:07pm

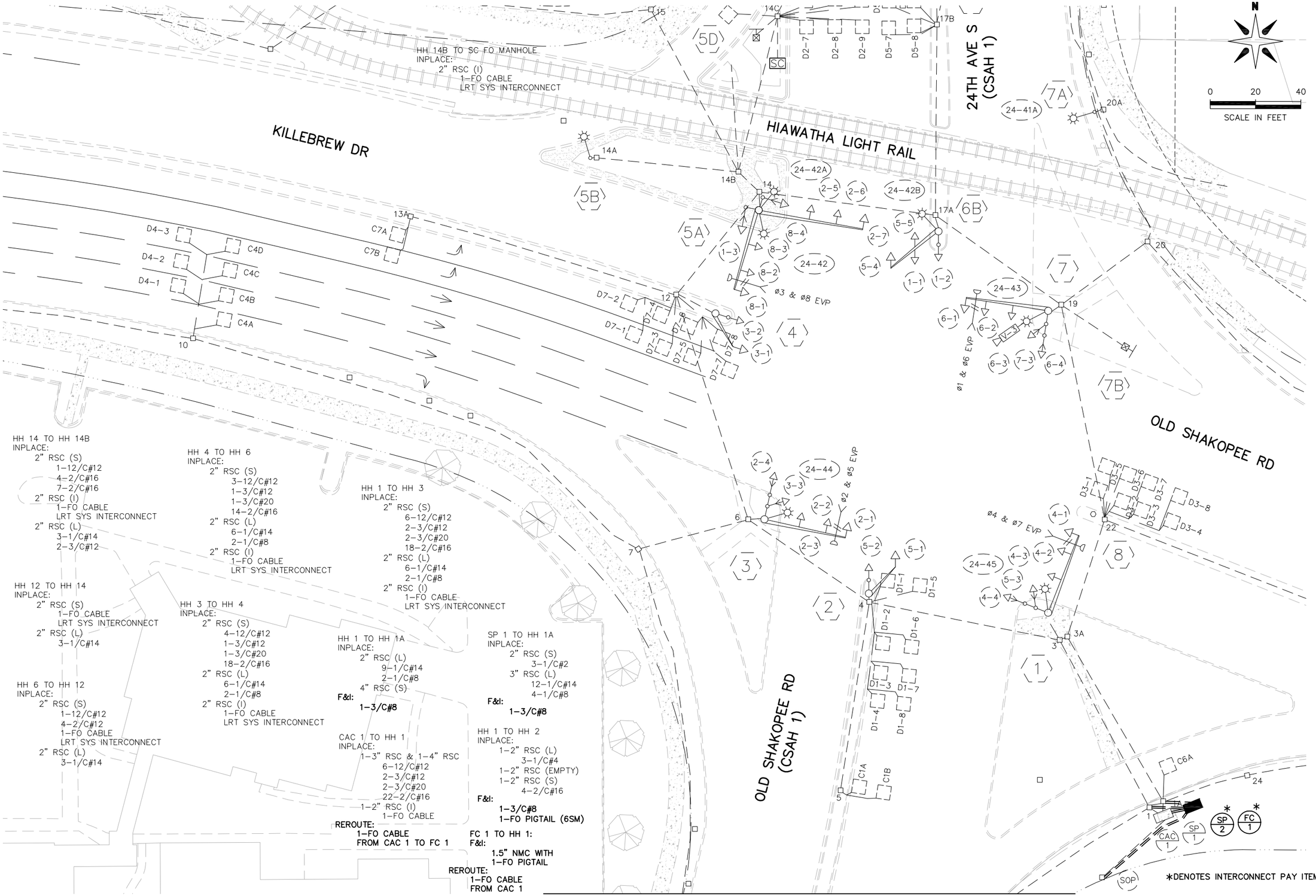


MATCH LINE – SEE SHEET 58

S.P. 107-030-005

# 2013-201 WAY FINDING PROJECT

## REVISE SIGNAL SYSTEM E

KILLEBREW DR AND OLD SHAKOPEE RD
INTERSECTION LAYOUT


CITY OF BLOOMINGTON MINNESOTA
1700 W 98TH ST.
BLOOMINGTON MN 55431
PHONE (952) 563-8700

ALLIANT ENGINEERING
233 Park Ave S, Ste 300
Minneapolis, MN 55415
612.758.3080 MAIN
612.758.3099 FAX
www.alliant-inc.com


REVISIONS

| DATE | DESCRIPTION | BY |
|---|---|---|
| | | |

I HEREBY CERTIFY THAT THIS PLAN WAS PREPARED BY ME OR UNDER MY DIRECT SUPERVISION AND THAT I AM A DULY LICENSED PROFESSIONAL ENGINEER UNDER THE LAWS OF THE STATE OF MINNESOTA.

THOMAS JENSEN LIC. # 44247 DATE 4/30/14

DRAWN: KAS
CHECKED: TJJ
APPROVED: TJJ

SHEET: 57 OF 82

Drawing name: X:\2012\120092\PlanSheets\120092-sysE.dwg -- Printed: May 16, 2014 - 2:44pm

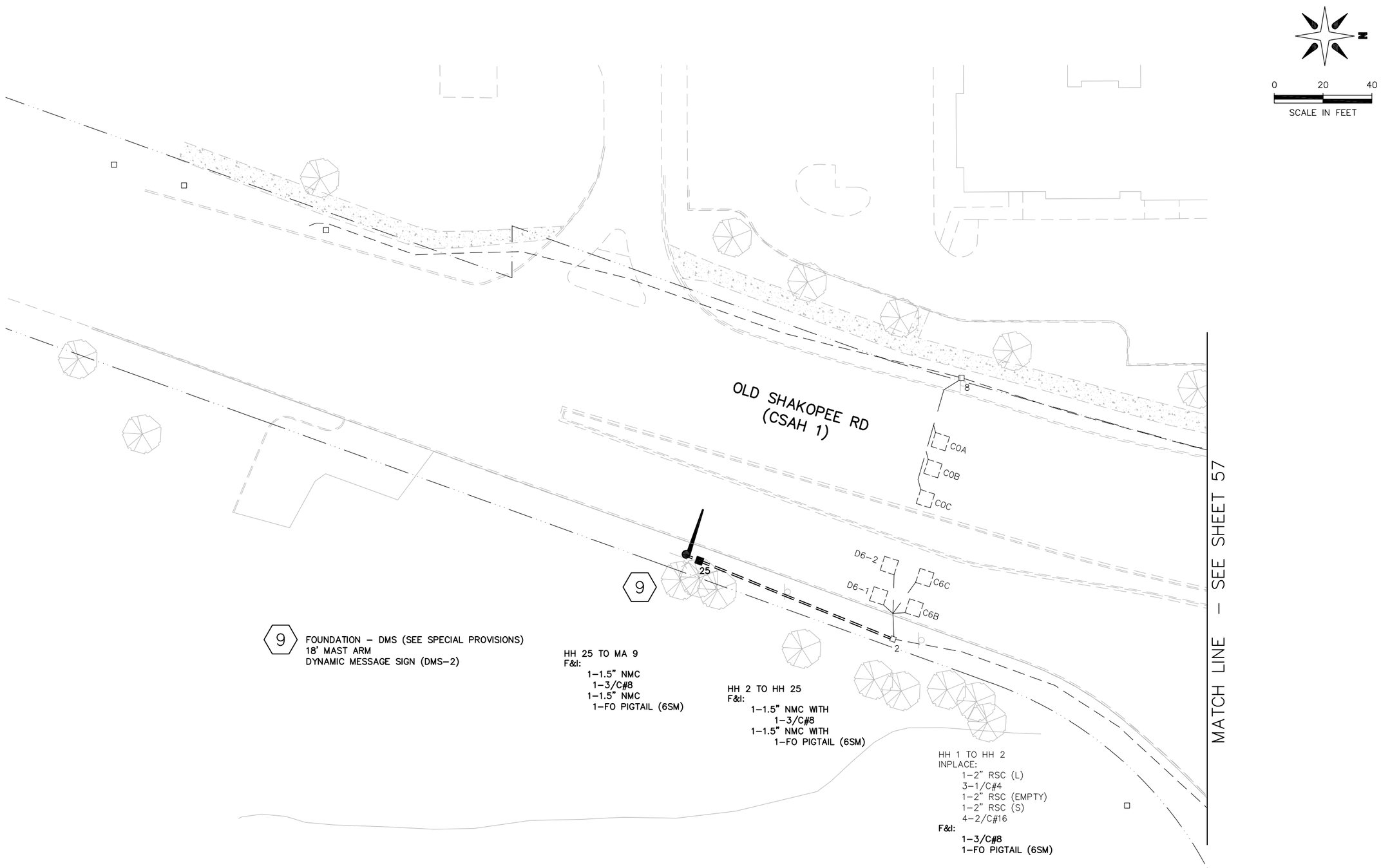


S.P. 107-030-005

2013-201 WAY FINDING PROJECT

REVISE SIGNAL SYTEM E

KILLEBREW DR AND OLD SHAKOPEE RD

INTERSECTION LAYOUT MATCHLINES

CITY OF BLOOMINGTON MINNESOTA
1700 W 98TH ST.
BLOOMINGTON MN 55431
PHONE (952) 563-8700

ALLIANT ENGINEERING
233 Park Ave S, Ste 300
Minneapolis, MN 55415
612.758.3080 MAIN
612.758.3099 FAX
www.alliant-inc.com

REVISIONS

| DATE | DESCRIPTION | BY |
|---|---|---|
| | | |

I HEREBY CERTIFY THAT THIS PLAN WAS PREPARED BY ME OR UNDER MY DIRECT SUPERVISION AND THAT I AM A DULY LICENSED PROFESSIONAL ENGINEER UNDER THE LAWS OF THE STATE OF MINNESOTA.

THOMAS JENSEN 44247 4/30/14
LIC. # DATE

DRAWN: KAS
CHECKED: TJJ
APPROVED: TJJ

SHEET:
58 OF 82

Drawing name: X:\2012\120092\PlanSheets\120092-sysE.dwg -- Printed: May 16, 2014 - 2:44pm

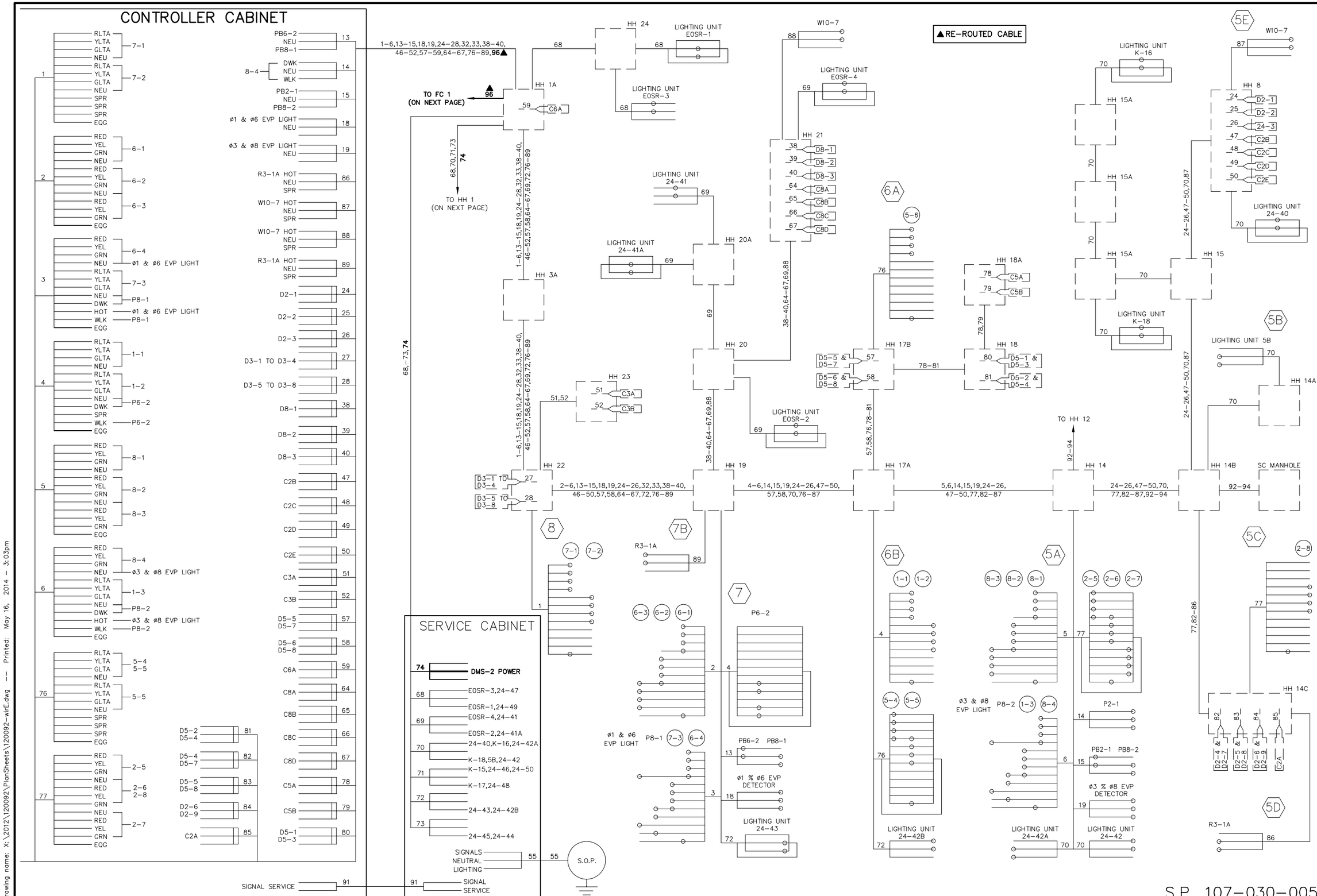


# 2013-201 WAY FINDING PROJECT

## REVISE SIGNAL SYSTEM E

KILLEBREW DR AND OLD SHAKOPEE RD

WIRING DIAGRAM – SHEET 1 OF 2


CITY OF BLOOMINGTON MINNESOTA
1700 W 98TH ST.
BLOOMINGTON MN 55431
PHONE (952) 563-8700

ALLIANT ENGINEERING
233 Park Ave S, Ste 300
Minneapolis, MN 55415
612.758.3080 MAIN
612.758.3099 FAX
www.alliant-inc.com


REVISIONS

| DATE | DESCRIPTION | BY |
|---|---|---|
| | | |

I HEREBY CERTIFY THAT THIS PLAN WAS PREPARED BY ME OR UNDER MY DIRECT SUPERVISION AND THAT I AM A DULY LICENSED PROFESSIONAL ENGINEER UNDER THE LAWS OF THE STATE OF MINNESOTA.

THOMAS JENSEN 44247 4/30/14
LIC. # DATE

DRAWN: KAS
CHECKED: TJJ
APPROVED: TJJ

SHEET: 59 OF 82

Drawing name: X:\2012\120092\PlanSheets\120092-wirE.dwg -- Printed: May 16, 2014 - 3:03pm

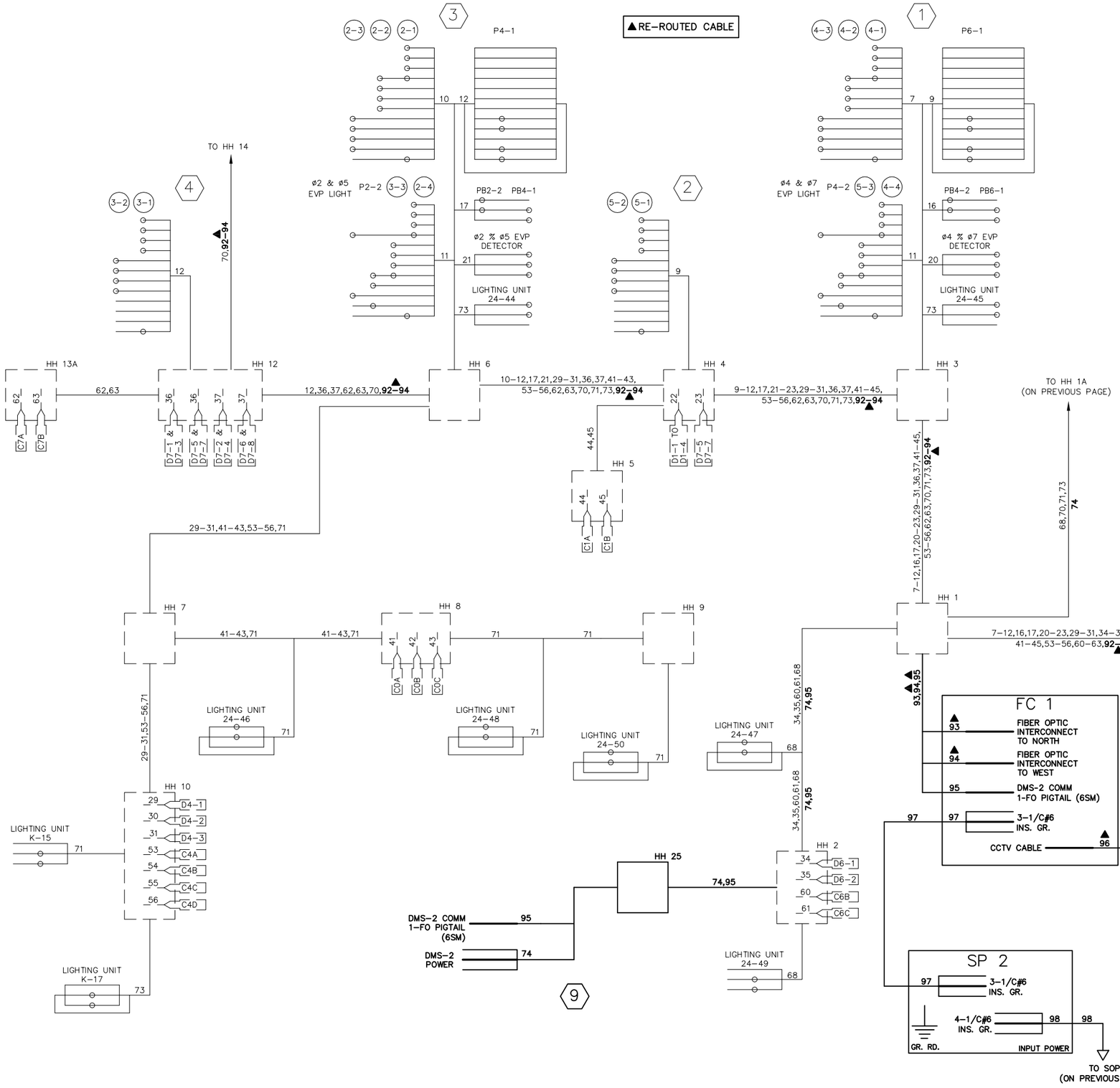


## CONTROLLER CABINET

| Pin | Wire | Circuit |
|---|---|---|
| 7 | RED | 4-1 |
| | YEL | |
| | GRN | |
| | NEU | |
| | RED | 4-2 |
| | YEL | |
| | GRN | |
| | NEU | |
| | RED | 4-3 |
| | YEL | |
| | GRN | |
| | EQG | |
| 8 | RED | 4-4 |
| | YEL | |
| | GRN | |
| | NEU | ø4 & ø7 EVP LIGHT |
| | RLTA | 5-3 |
| | YLTA | |
| | GLTA | |
| | NEU | P4-2 |
| | DWK | |
| | HOT | ø4 & ø7 EVP LIGHT |
| | WLK | P4-2 |
| | EQG | |
| 9 | RLTA | 5-1 |
| | YLTA | |
| | GLTA | |
| | NEU | |
| | RLTA | 5-2 |
| | YLTA | |
| | GLTA | |
| | NEU | P6-1 |
| | DWK | |
| | SPR | |
| | WLK | P6-1 |
| | EQG | |
| 10 | RED | 2-1 |
| | YEL | |
| | GRN | |
| | NEU | |
| | RED | 2-2 |
| | YEL | |
| | GRN | |
| | NEU | |
| | RED | 2-3 |
| | YEL | |
| | GRN | |
| | EQG | |
| 11 | RED | 2-4 |
| | YEL | |
| | GRN | |
| | NEU | ø2 & ø5 EVP LIGHT |
| | RLTA | 3-3 |
| | YLTA | |
| | GLTA | |
| | NEU | P2-2 |
| | DWK | |
| | HOT | ø2 & ø5 EVP LIGHT |
| | WLK | P2-2 |
| | EQG | |
| 12 | RLTA | 3-1 |
| | YLTA | |
| | GLTA | |
| | NEU | |
| | RLTA | 3-2 |
| | YLTA | |
| | GLTA | |
| | NEU | P4-1 |
| | DWK | |
| | SPR | |
| | WLK | P4-1 |
| | EQG | |
| 16 | PB4-2 | |
| | NEU | |
| | PB6-1 | |
| 17 | PB2-2 | |
| | NEU | |
| | PB4-1 | |
| 20 | ø4 & ø7 EVP DETECTOR | |
| | NEU | |

| Pin | Circuit |
|---|---|
| 21 | ø2 & ø5 EVP DETECTOR NEU |
| 22 | D1-1 TO D1-4 |
| 23 | D1-5 TO D1-8 |
| 29 | D4-1 |
| 30 | D4-2 |
| 31 | D4-3 |
| 34 | D6-1 |
| 35 | D6-2 |
| 36 | D7-1,D7-3,D7-5,D7-7 |
| 37 | D7-2,D7-4,D7-6,D7-8 |
| 41 | C0A |
| 42 | C0B |
| 43 | C0C |
| 44 | C1A |
| 45 | C1B |
| 53 | C4A |
| 54 | C4B |
| 55 | C4C |
| 56 | C4D |
| 60 | C6B |
| 61 | C6C |
| 62 | C7A |
| 63 | C7B |
| 92 | LRT SYS INTERCONNECT |
| 93 | FIBER OPTIC IC TO NORTH |
| 94 | FIBER OPTIC IC TO WEST |
| 96 | CCTV CABLE |

# 2013-201 WAY FINDING PROJECT

## REVISE SIGNAL SYSTEM E

KILLEBREW DR AND OLD SHAKOPEE RD

WIRING DIAGRAM - SHEET 2 OF 2


CITY OF BLOOMINGTON MINNESOTA
1700 W 98TH ST.
BLOOMINGTON MN 55431
PHONE (952) 563-8700

ALLIANT ENGINEERING
233 Park Ave S, Ste 300
Minneapolis, MN 55415
612.758.3080 MAIN
612.758.3099 FAX
www.alliant-inc.com


REVISIONS

| DATE | DESCRIPTION | BY |
|---|---|---|
| | | |

I HEREBY CERTIFY THAT THIS PLAN WAS PREPARED BY ME OR UNDER MY DIRECT SUPERVISION AND THAT I AM A DULY LICENSED PROFESSIONAL ENGINEER UNDER THE LAWS OF THE STATE OF MINNESOTA.

THOMAS JENSEN 44247 4/30/14
LIC. # DATE

DRAWN: KAS
CHECKED: TJJ
APPROVED: TJJ

SHEET: 60 OF 82

S.P. 107-030-005

Drawing name: X:\2012\120092\PlanSheets\120092-wirE.dwg -- Printed: May 16, 2014 - 3:03pm

ADD ALT. 1

S.P. 107-030-005

# 2013-201 WAY FINDING PROJECT

## REVISE SIGNAL SYSTEM E1

OLD SHAKOPEE RD AND 24TH AVE S (CSAH 1)

INTERSECTION LAYOUT


CITY OF BLOOMINGTON MINNESOTA
1700 W 98TH ST.
BLOOMINGTON MN 55431
PHONE (952) 563-8700

ALLIANT ENGINEERING
233 Park Ave S, Ste 300
Minneapolis, MN 55415
612.758.3080 MAIN
612.758.3099 FAX
www.alliant-inc.com


REVISIONS

| DATE | DESCRIPTION | BY |
|---|---|---|
| | | |

I HEREBY CERTIFY THAT THIS PLAN WAS PREPARED BY ME OR UNDER MY DIRECT SUPERVISION AND THAT I AM A DULY LICENSED PROFESSIONAL ENGINEER UNDER THE LAWS OF THE STATE OF MINNESOTA.

THOMAS JENSEN

44247 4/30/14

LIC. # DATE

DRAWN: KAS

CHECKED: TJJ

APPROVED: TJJ

SHEET: 61 OF 82

Drawing name: X:\2012\120092\PlanSheets\120092-sysE1.dwg -- Printed: May 16, 2014 - 2:46pm

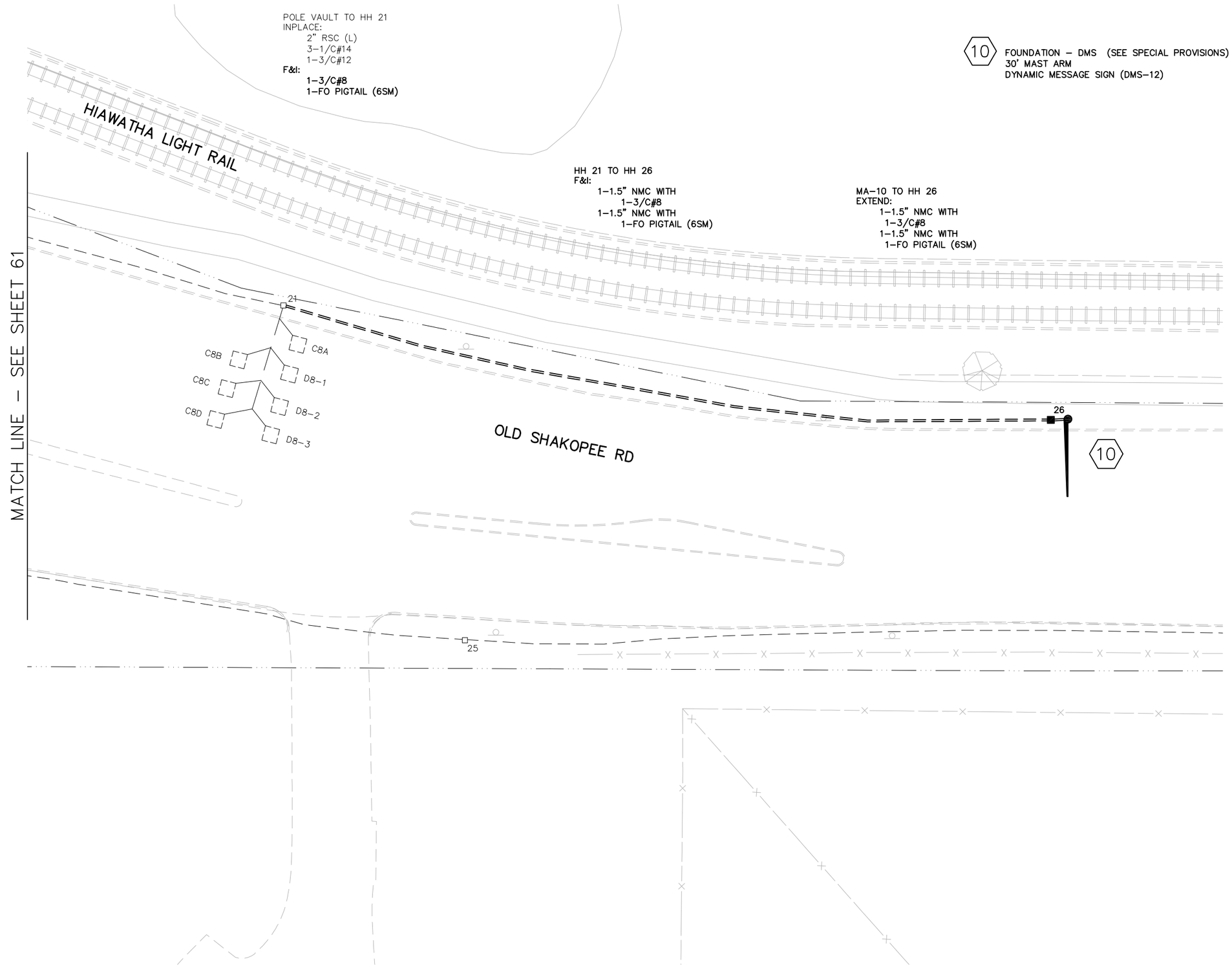


ADD ALT. 1
S.P. 107-030-005

2013-201 WAY FINDING PROJECT

REVISE SIGNAL SYSTEM E1

OLD SHAKOPEE RD AND 24TH AVE S (CSAH 1)

INTERSECTION LAYOUT MATCHLINES


CITY OF BLOOMINGTON MINNESOTA
1700 W 98TH ST.
BLOOMINGTON MN 55431
PHONE (952) 563-8700

ALLIANT ENGINEERING
233 Park Ave S, Ste 300
Minneapolis, MN 55415
612.758.3080 MAIN
612.758.3099 FAX
www.alliant-inc.com


REVISIONS

| DATE | DESCRIPTION | BY |
|---|---|---|
| | | |

I HEREBY CERTIFY THAT THIS PLAN, WAS PREPARED BY ME OR UNDER MY DIRECT SUPERVISION, AND THAT I AM A DULY LICENSED PROFESSIONAL ENGINEER UNDER THE LAWS OF THE STATE OF MINNESOTA.

THOMAS JENSEN 44247 4/30/14
LIC. # DATE

DRAWN: KAS
CHECKED: TJJ
APPROVED: TJJ

SHEET:
62 OF 82

Drawing name: X:\2012\120092\PlanSheets\120092-sysE1.dwg -- Printed: May 16, 2014 - 2:46pm

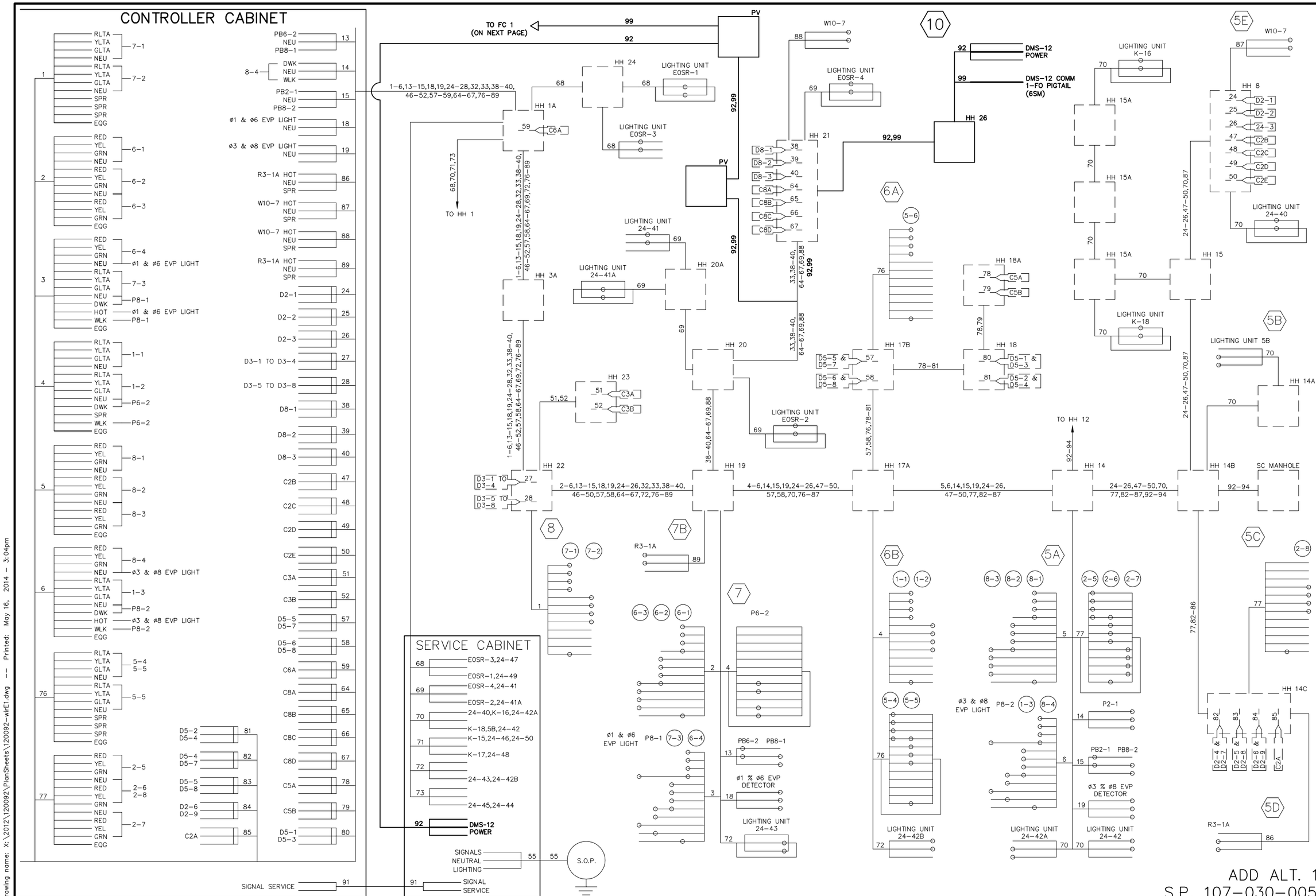


# 2013-201 WAY FINDING PROJECT

## REVISE SIGNAL SYSTEM E1

OLD SHAKOPEE RD AND 24TH AVE S (CSAH 1)

WIRING DIAGRAM - SHEET 1 OF 2


CITY OF BLOOMINGTON MINNESOTA
1700 W 98TH ST.
BLOOMINGTON MN 55431
PHONE (952) 563-8700

ALLIANT ENGINEERING
233 Park Ave S, Ste 300
Minneapolis, MN 55415
612.758.3080 MAIN
612.758.3099 FAX
www.alliant-inc.com


REVISIONS

| DATE | DESCRIPTION | BY |
|---|---|---|
| | | |

I HEREBY CERTIFY THAT THIS PLAN WAS PREPARED BY ME OR UNDER MY DIRECT SUPERVISION AND THAT I AM A DULY LICENSED PROFESSIONAL ENGINEER UNDER THE LAWS OF THE STATE OF MINNESOTA.

THOMAS JENSEN

44247 4/30/14
LIC. # DATE

DRAWN: KAS
CHECKED: TJJ
APPROVED: TJJ

SHEET: 63 OF 82

Drawing name: X:\2012\120092\PlanSheets\120092-wirE1.dwg -- Printed: May 16, 2014 - 3:04pm

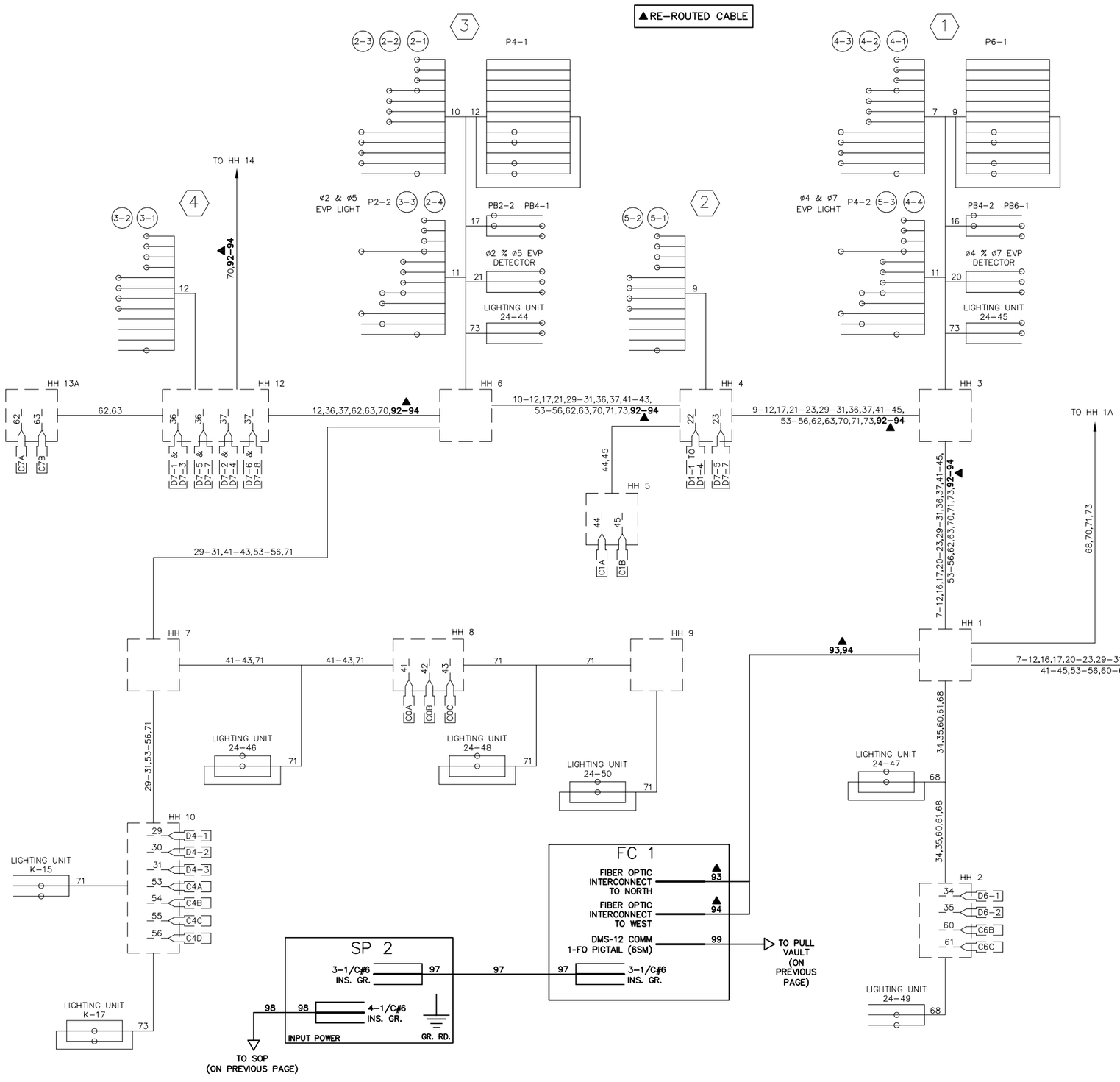


## CONTROLLER CABINET

| Terminal | Wire | Circuit |
|---|---|---|
| 7 | RED | 4-1 |
| | YEL | |
| | GRN | |
| | NEU | |
| | RED | 4-2 |
| | YEL | |
| | GRN | |
| | NEU | |
| | RED | 4-3 |
| | YEL | |
| | GRN | |
| | EQG | |
| 8 | RED | 4-4 |
| | YEL | |
| | GRN | |
| | NEU | ø4 & ø7 EVP LIGHT |
| | RLTA | 5-3 |
| | YLTA | |
| | GLTA | |
| | NEU | P4-2 |
| | DWK | |
| | HOT | ø4 & ø7 EVP LIGHT |
| | WLK | P4-2 |
| | EQG | |
| 9 | RLTA | 5-1 |
| | YLTA | |
| | GLTA | |
| | NEU | |
| | RLTA | 5-2 |
| | YLTA | |
| | GLTA | |
| | NEU | P6-1 |
| | DWK | |
| | SPR | |
| | WLK | P6-1 |
| | EQG | |
| 10 | RED | 2-1 |
| | YEL | |
| | GRN | |
| | NEU | |
| | RED | 2-2 |
| | YEL | |
| | GRN | |
| | NEU | |
| | RED | 2-3 |
| | YEL | |
| | GRN | |
| | EQG | |
| 11 | RED | 2-4 |
| | YEL | |
| | GRN | |
| | NEU | ø2 & ø5 EVP LIGHT |
| | RLTA | 3-3 |
| | YLTA | |
| | GLTA | |
| | NEU | P2-2 |
| | DWK | |
| | HOT | ø2 & ø5 EVP LIGHT |
| | WLK | P2-2 |
| | EQG | |
| 12 | RLTA | 3-1 |
| | YLTA | |
| | GLTA | |
| | NEU | |
| | RLTA | 3-2 |
| | YLTA | |
| | GLTA | |
| | NEU | P4-1 |
| | DWK | |
| | SPR | |
| | WLK | P4-1 |
| | EQG | |
| 16 | PB4-2 | |
| | NEU | |
| | PB6-1 | |
| 17 | PB2-2 | |
| | NEU | |
| | PB4-1 | |
| 20 | ø4 & ø7 EVP DETECTOR | |
| | NEU | |

| Terminal | Wire |
|---|---|
| 21 | ø2 & ø5 EVP DETECTOR NEU |
| 22 | D1-1 TO D1-4 |
| 23 | D1-5 TO D1-8 |
| 29 | D4-1 |
| 30 | D4-2 |
| 31 | D4-3 |
| 34 | D6-1 |
| 35 | D6-2 |
| 36 | D7-1,D7-3,D7-5,D7-7 |
| 37 | D7-2,D7-4,D7-6,D7-8 |
| 41 | C0A |
| 42 | C0B |
| 43 | C0C |
| 44 | C1A |
| 45 | C1B |
| 53 | C4A |
| 54 | C4B |
| 55 | C4C |
| 56 | C4D |
| 60 | C6B |
| 61 | C6C |
| 62 | C7A |
| 63 | C7B |
| 92 | LRT SYS INTERCONNECT |
| 93 | FIBER OPTIC IC TO NORTH |
| 94 | FIBER OPTIC IC TO WEST |

# 2013-201 WAY FINDING PROJECT

REVISE SIGNAL SYSTEM E1

OLD SHAKOPEE RD AND 24TH AVE S (CSAH 1)

WIRING DIAGRAM - SHEET 2 OF 2


CITY OF BLOOMINGTON MINNESOTA
1700 W 98TH ST.
BLOOMINGTON MN 55431
PHONE (952) 563-8700

ALLIANT ENGINEERING
233 Park Ave S, Ste 300
Minneapolis, MN 55415
612.758.3080 MAIN
612.758.3099 FAX
www.alliant-inc.com


REVISIONS

| DATE | DESCRIPTION | BY |
|---|---|---|
| | | |

I HEREBY CERTIFY THAT THIS PLAN WAS PREPARED BY ME OR UNDER MY DIRECT SUPERVISION AND THAT I AM A DULY LICENSED PROFESSIONAL ENGINEER UNDER THE LAWS OF THE STATE OF MINNESOTA.

THOMAS JENSEN — LIC. # 44247 — DATE 4/30/14

DRAWN: KAS
CHECKED: TJJ
APPROVED: TJJ

SHEET: 64 OF 82

ADD ALT. 1
S.P. 107-030-005

Drawing name: X:\2012\120092\PlanSheets\120092-wirE1.dwg -- Printed: May 16, 2014 - 3:04pm

▲∗ DENOTES BID ALT 1
INTERCONNECT PAY ITEM

1. F&I POWER CABLE FROM SOURCE OF POWER – TERMINATE AT TERMINAL BLOCK ▲∗
2. F&I 1–FO PIGTAIL TO DMS. PLACE 30' SLACK LOOP OF PIGTAIL CABLE WITHIN CABINET AGAINST SIDEWALL. CONNECT ARMOUR TO NORSCAN DEVICE – TERMINATE END & LAND IN PATCH PANEL
3. F&I FIBER OPTIC PATCH CORD(S) ▲∗
4. F&I 1–1/C NO. 6 BARE GROUND WIRE – COAT CONNECTION WITH ANTI–OXIDIZING AGENT ▲∗
5. INSTALL NEOPRENE GASKET (CITY PROVIDED) ▲∗
6. INSTALL COMMUNICATION EQUIPMENT (CITY PROVIDED) ▲∗
7. SHEATH GROUNDING UNIT
8. F&I CCTV POWER SUPPLY
9. F&I CAT 6 PATCH CABLE(S) ▲∗
10. F&I 1–48 POSITION SPLICE/PATCH PANEL ▲∗
11. F&I 1–FO CABLE (36SM). PLACE 30' SLACK LOOP OF CABLE WITHIN CABINET AGAINST SIDEWALL. CONNECT ARMOUR TO NORSCAN DEVICE – TERMINATE END AND LAND IN PATCH PANEL. ▲∗
12. PULL BACK AND REROUTE EXISTING FO INTERCONNECT FROM CAC TO FC 1. PLACE SLACK LOOP OF CABLE AGAINST SIDEWALL. TERMINATE END AND LAND IN PATCH PANEL. ▲∗
13. F&I 1–CAT 6 TO CAC. TERMINATE BOTH ENDS. ▲∗
14. F&I 1–CCTV CABLE

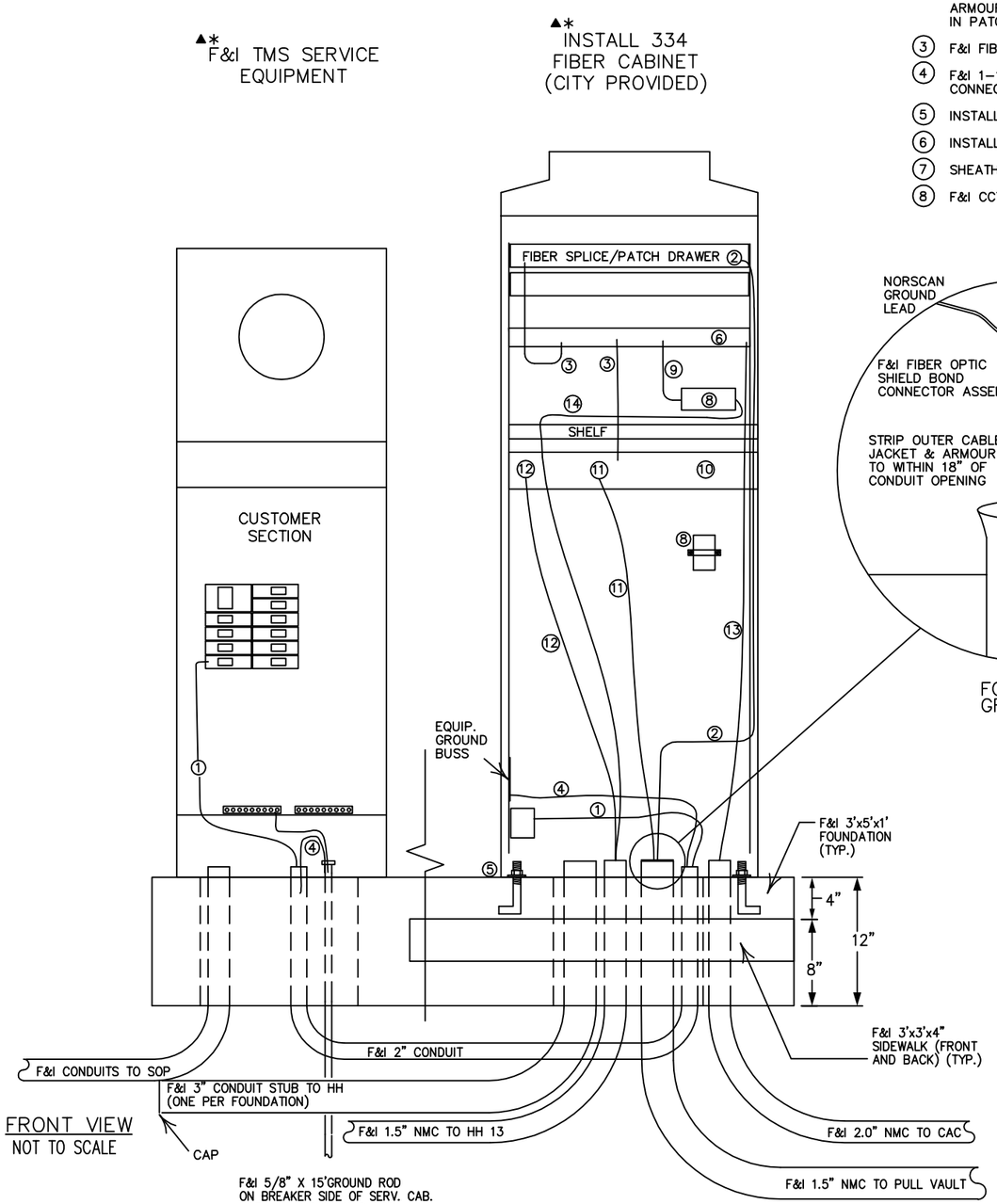


FRONT VIEW
NOT TO SCALE

TYPICAL 334 SERIES FIBER CABINET INSTALLATION

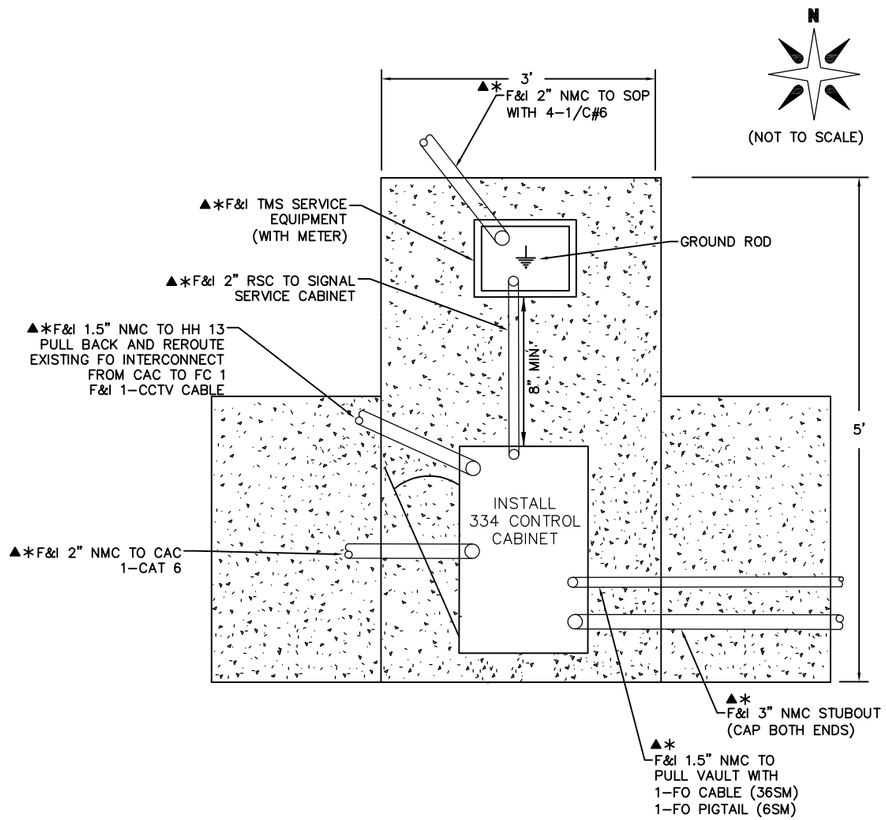


NOTES:

1. THE UPPER PART OF THE EQUIPMENT PAD SHALL BE BEVELED OR CHAMFERED IN A NEAT MANNER AS APPROVED BY THE ENGINEER.
2. THE TOP OF THE CONDUITS SHALL BE THREADED AND CAPPED AFTER INSTALLATION (UNTIL CABLES ARE INSTALLED).
3. THE LOCATION OF CONDUITS WITHIN THE CONCRETE PAD SHALL BE 6" TO THE CENTER OF THE CONDUIT FROM THE INSIDE LIP OF THE MOUNTING FLANGE ON THE DOOR SIDE OF THE CABINET. THE CONDUITS SHALL PROJECT 2" TO 3" ABOVE THE CONCRETE. THE CONDUITS SHALL NOT INTERFERE WITH THE CABINET FUNCTIONS (CONTROL EQUIPMENT, SUPPORTING MEMBERS, ETC.). FINAL CONDUIT LOCATIONS SHALL BE DIRECTED BY THE ENGINEER.
4. CONDUITS WITH BOTH ENDS TERMINATING WITHIN THE PAD SHALL NOT BE INSTALLED BELOW CONCRETE.
5. THE EXACT LOCATION OF CONDUITS WITHIN THE PAD SHALL BE DETERMINED BY THE ENGINEER IN THE FIELD.
6. A SIDEWALK OR CONCRETE AREA SHALL BE ON THE DOOR SIDE OF THE CABINET IN ALL CASES.
7. CONCRETE MIX 3Y43 OR APPROVED EQUAL SHALL BE USED FOR THE EQUIPMENT PAD AND ADJACENT SIDEWALK.
8. TOP OF EQUIPMENT PAD TO BE 12" ABOVE FINISHED GRADE. LOCATION AND ELEVATION OF EQUIPMENT PAD TOP SHALL BE STAKED BY SURVEY CREW.
9. SEE DETAIL IN PLANS FOR SP 1. REFER TO DIVISION SS (SPECIAL PROVISIONS) FOR SP 2.

S.P. 107–030–005

2013–201 WAY FINDING PROJECT

REVISE SIGNAL SYSTEM F
AMERICAN BLVD AND 28TH AVE S
334 FIBER CABINET DETAIL


CITY OF BLOOMINGTON MINNESOTA
1700 W 98TH ST.
BLOOMINGTON MN 55431
PHONE (952) 563-8700

ALLIANT ENGINEERING
233 Park Ave S, Ste 300
Minneapolis, MN 55415
612.758.3080 MAIN
612.758.3099 FAX
www.alliant–inc.com


REVISIONS

| DATE | DESCRIPTION | BY |
|---|---|---|
| | | |

I HEREBY CERTIFY THAT THIS PLAN WAS PREPARED BY ME OR UNDER MY DIRECT SUPERVISION AND THAT I AM A DULY LICENSED PROFESSIONAL ENGINEER UNDER THE LAWS OF THE STATE OF MINNESOTA.

THOMAS JENSEN 44247 4/30/14
LIC. # DATE

DRAWN: KAS
CHECKED: TJJ
APPROVED: TJJ

SHEET:
65 OF 82


Drawing name: X:\2012\120092\PlanSheets\120092–dd02.dwg -- Printed: May 16, 2014 – 12:06pm

▲✱ DENOTES BID ALT 1
INTERCONNECT PAY ITEM

5 FOUNDATION – DMS (SEE SPECIAL PROVISIONS)
18' MAST ARM
DYNAMIC MESSAGE SIGN (DMS–8)

N

0 20 40
SCALE IN FEET

HH 13 TO MA–1
INPLACE:
3" RSC
2–12/C#12
3–3/C#12
1–3/C#20
2–2/C#12
F&I:
1–CCTV CABLE

CAC 1 TO FC 1:
1–2" NMC WITH
1–CAT 6

FC 1 TO HH 13:
1–1.5" NMC WITH ▲✱
1–CCTV CABLE
REROUTE EXISTING FO INTERCONNECT
FROM CAC TO FC 1 ▲✱

SP 1 TO HH 1
INPLACE:
1.5" RSC
F&I:
1–3/C#8

SP 2 TO SOP:
1–2" RSC WITH
4–1/C#6

HH 1 TO HH 2
INPLACE:
1.5" RSC
F&I:
1–3/C#8

PULL VAULT TO PULL VAULT:
F&I:
1–1.5" NMC WITH
1–FO CABLE (36SM) ▲✱
1–FO PIGTAIL (6SM)

MA–5 TO PULL VAULT:
1–1.5" NMC WITH
1–FO PIGTAIL (6SM)

MA–5 TO HH 2:
1–1.5" NMC WITH
1–3/C#8

PULL VAULT TO PULL VAULT:
F&I:
1.5" NMC WITH
1–FO CABLE (36SM) ▲✱

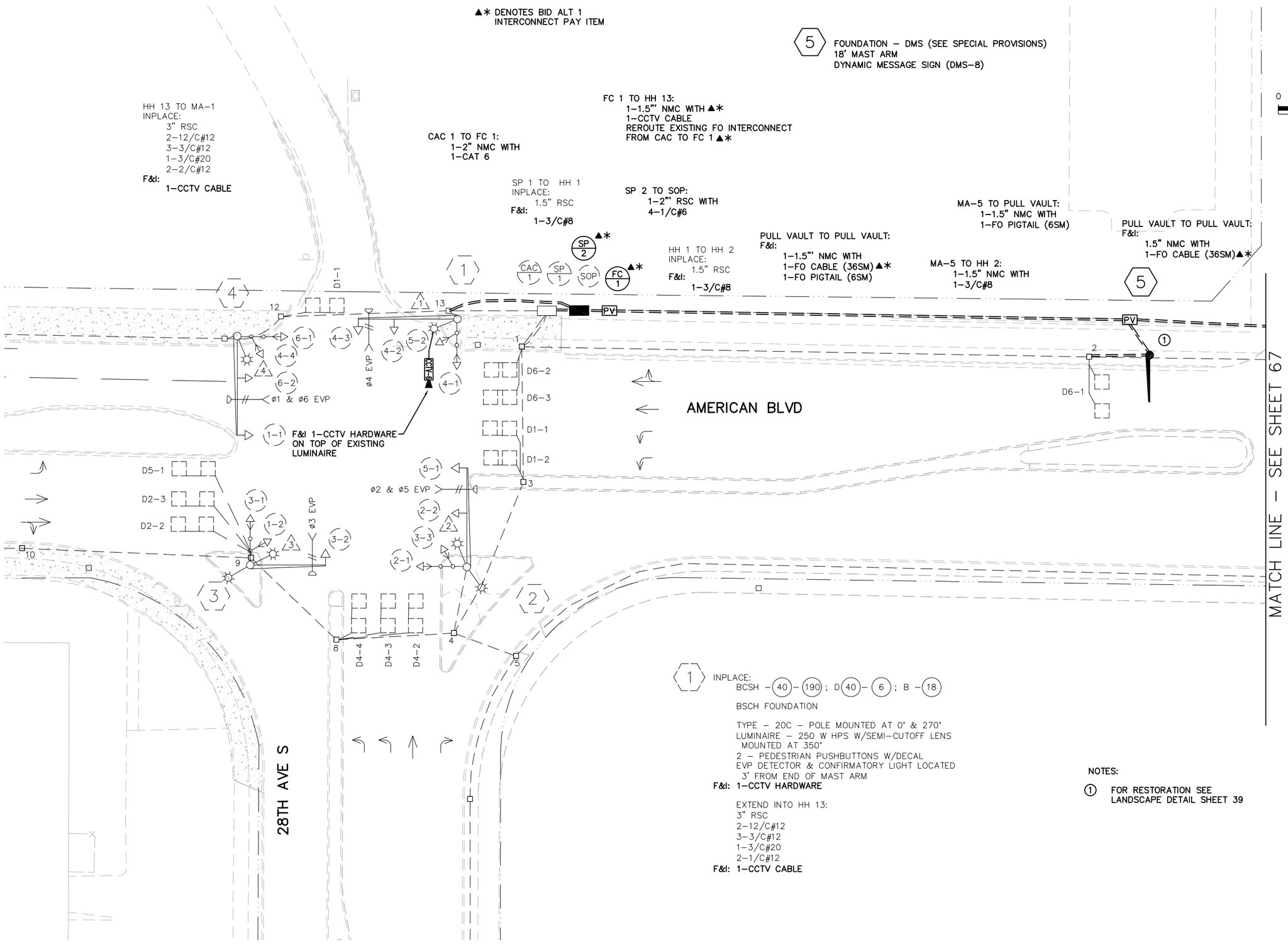


1 INPLACE:
BCSH –(40)–(190); D(40)–(6); B –(18)

BSCH FOUNDATION

TYPE – 20C – POLE MOUNTED AT 0° & 270°
LUMINAIRE – 250 W HPS W/SEMI–CUTOFF LENS
MOUNTED AT 350°
2 – PEDESTRIAN PUSHBUTTONS W/DECAL
EVP DETECTOR & CONFIRMATORY LIGHT LOCATED
3' FROM END OF MAST ARM
F&I: 1–CCTV HARDWARE

EXTEND INTO HH 13:
3" RSC
2–12/C#12
3–3/C#12
1–3/C#20
2–1/C#12
F&I: 1–CCTV CABLE

NOTES:

1 FOR RESTORATION SEE
LANDSCAPE DETAIL SHEET 39

ADD ALT. 1
S.P. 107–030–005

2013–201 WAY FINDING PROJECT

REVISE SIGNAL SYSTEM F
AMERICAN BLVD AND 28TH AVE S
INTERSECTION LAYOUT

CITY OF BLOOMINGTON MINNESOTA
1700 W 98TH ST.
BLOOMINGTON MN 55431
PHONE (952) 563-8700

ALLIANT ENGINEERING
233 Park Ave S, Ste 300
Minneapolis, MN 55415
612.758.3080 MAIN
612.758.3099 FAX
www.alliant-inc.com

REVISIONS

| DATE | DESCRIPTION | BY |
|---|---|---|
| | | |

I HEREBY CERTIFY THAT THIS PLAN WAS PREPARED BY ME OR UNDER MY DIRECT SUPERVISION AND THAT I AM A DULY LICENSED PROFESSIONAL ENGINEER UNDER THE LAWS OF THE STATE OF MINNESOTA.

THOMAS JENSEN 44247 4/30/14
LIC. # DATE

DRAWN: KAS
CHECKED: TJJ
APPROVED: TJJ

SHEET:
66 OF 82

Drawing name: X:\2012\120092\PlanSheets\120092-sysF.dwg -- Printed: May 16, 2014 - 2:48pm

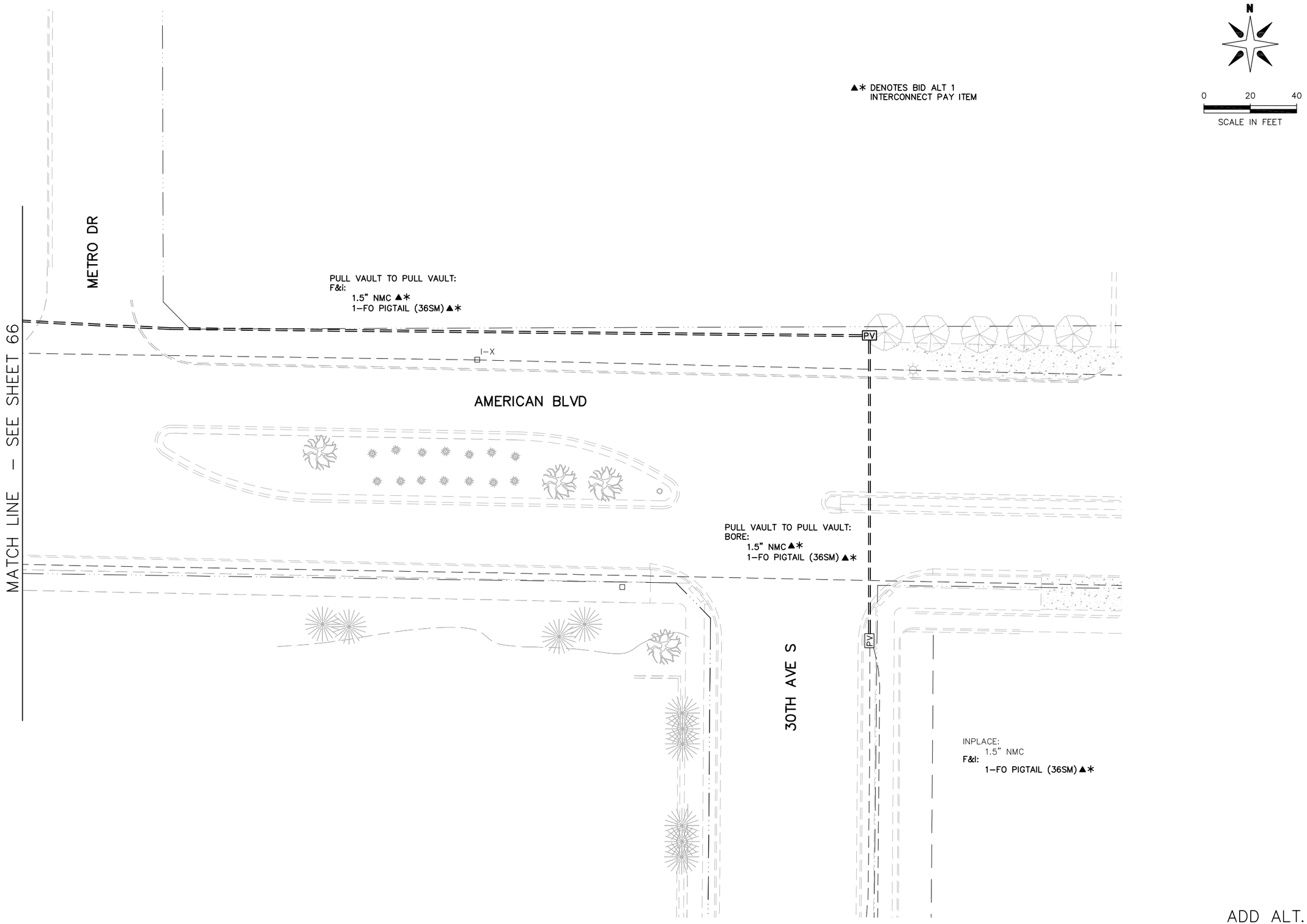


ADD ALT. 1
S.P. 107–030–005

2013–201 WAY FINDING PROJECT

REVISE SIGNAL SYSTEM F
AMERICAN BLVD AND 28TH AE S
INTERSECTION LAYOUT MATCHLINES

CITY OF BLOOMINGTON MINNESOTA
1700 W 98TH ST.
BLOOMINGTON MN 55431
PHONE (952) 563-8700

ALLIANT ENGINEERING
233 Park Ave S, Ste 300
Minneapolis, MN 55415
612.758.3080 MAIN
612.758.3099 FAX
www.alliant-inc.com

REVISIONS

| DATE | DESCRIPTION | BY |
|---|---|---|
| | | |

I HEREBY CERTIFY THAT THIS PLAN WAS PREPARED BY ME OR UNDER MY DIRECT SUPERVISION AND THAT I AM A DULY LICENSED PROFESSIONAL ENGINEER UNDER THE LAWS OF THE STATE OF MINNESOTA.

THOMAS JENSEN 44247 4/30/14
LIC. # DATE

DRAWN: KAS
CHECKED: TJJ
APPROVED: TJJ

SHEET:
67 OF 82

Drawing name: X:\2012\120092\PlanSheets\120092-sysF.dwg -- Printed: May 16, 2014 - 2:48pm

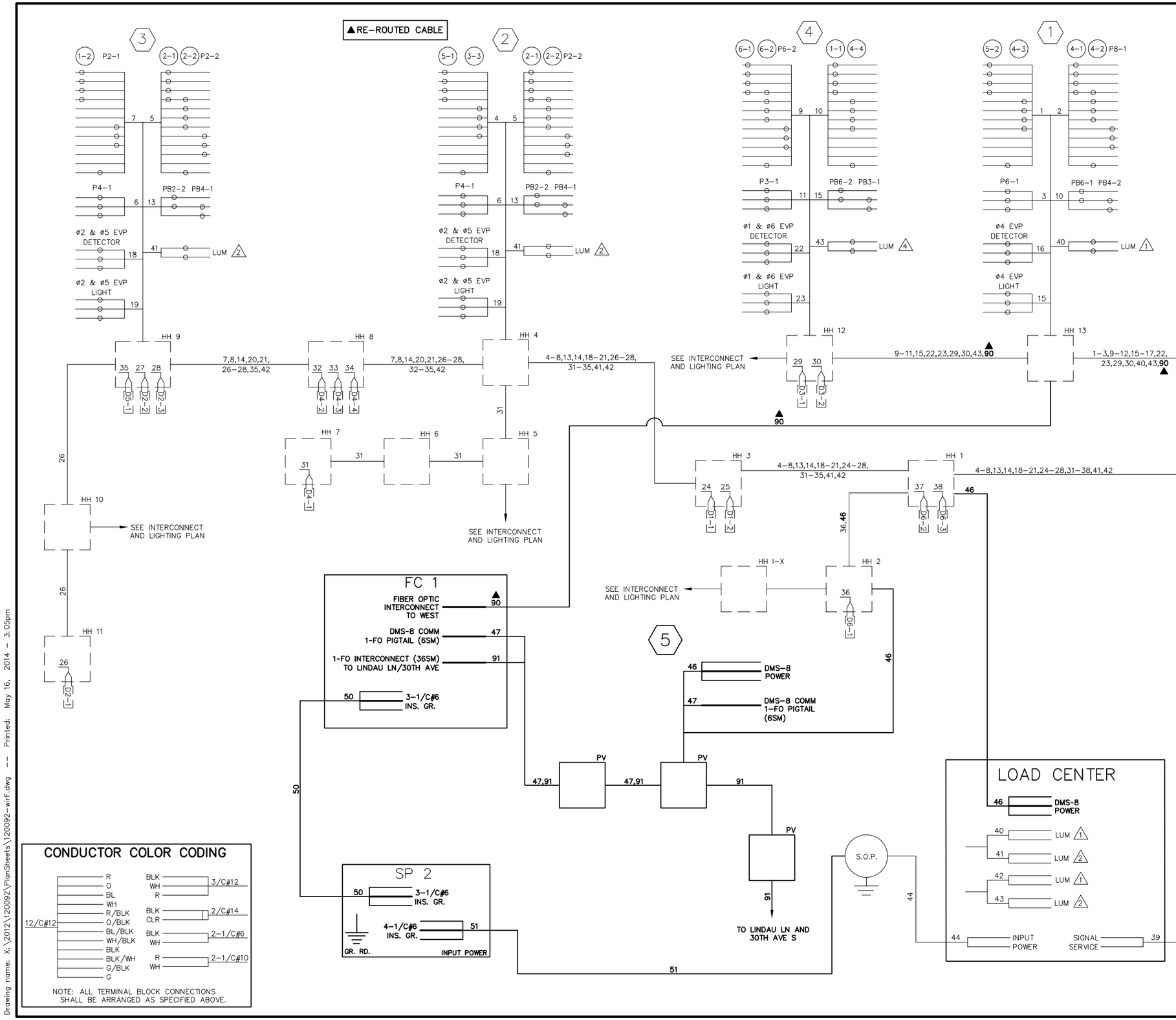


## CONDUCTOR COLOR CODING

| | | | |
|---|---|---|---|
| 12/C#12 | R, O, BL, WH, R/BLK, O/BLK, BL/BLK, WH/BLK, BLK, BLK/WH, G/BLK, G | BLK, WH, R | 3/C#12 |
| | | BLK, CLR | 2/C#14 |
| | | BLK, WH | 2-1/C#6 |
| | | R, WH | 2-1/C#10 |

NOTE: ALL TERMINAL BLOCK CONNECTIONS SHALL BE ARRANGED AS SPECIFIED ABOVE.

ADD ALT. 1
S.P. 107-030-005

# 2013-201 WAY FINDING PROJECT

REVISE SIGNAL SYSTEM F

AMERICAN BLVD AND 28TH AVE S

WIRING DIAGRAM - SHEET 1 OF 1


CITY OF BLOOMINGTON MINNESOTA
1700 W 98TH ST. BLOOMINGTON MN 55431 PHONE (952) 563-8700

ALLIANT ENGINEERING
233 Park Ave S, Ste 300
Minneapolis, MN 55415
612.758.3080 MAIN
612.758.3099 FAX
www.alliant-inc.com


REVISIONS

| DATE | DESCRIPTION | BY |
|---|---|---|

I HEREBY CERTIFY THAT THIS PLAN WAS PREPARED BY ME OR UNDER MY DIRECT SUPERVISION AND THAT I AM A DULY LICENSED PROFESSIONAL ENGINEER UNDER THE LAWS OF THE STATE OF MINNESOTA.

THOMAS JENSEN — LIC. # 44247 — DATE 4/30/14

DRAWN: KAS
CHECKED: TJJ
APPROVED: TJJ

SHEET: 68 OF 82

Drawing name: X:\2012\120092\PlanSheets\120092-wirF.dwg -- Printed: May 16, 2014 - 3:05pm

MATCH LINE – SEE SHEET 70

CAC 1 TO HH 1
INPLACE:
2–4" NMC
5–12/C#12
1–5/C#12
5–3/C#12
2–3/C#20
17–2/C#14
1–FO CABLE
**REMOVE:**
**1–SIGN CABLE**
**F&I:**
**1–FO PIGTAIL (6SM)**

HH 1 TO HH 2
INPLACE:
2–4"NMC
5–12/C#12
1–5/C#12
5–3/C#12
2–3/C#12 (LUM)
2–3/C#20
15–2/C#14
**REMOVE:**
**1–SIGN CABLE**

HH 2 TO HH 4
INPLACE:
2–4"NMC
5–12/C#12
1–5/C#12
5–3/C#12
2–3/C#12 (LUM)
2–3/C#20
13–2/C#14
**REMOVE:**
**1–SIGN CABLE**

HH 1 TO HH 3
INPLACE:
1–3" NMC
2–2/C#14
ICTM CABLE
**F&I:**
**1–3/C#8**
**1–FO PIGTAIL (6SM)**

SP 1 TO HH 1
INPLACE:
3" NMC WITH CAMERA
AND SIGN CABLE
**F&I:**
**1–3/C#8**

**F&I: 1–6 POSITION TERMINATION PANEL**
**F&I: 1–FO PIGTAIL TERMINATION**

34TH AVE S

METRO BLUE LINE LRT

HH 4 TO HH 5
INPLACE:
2–4"NMC
5–12/C#12
5–3/C#12
2–3/C#12 (LUM)
2–3/C#20
10–2/C#14
**REMOVE:**
**1–SIGN CABLE**

HH 5 TO HH 6
INPLACE:
EXISTING CONDUIT
4–12/C#12
4–3/C#12
2–3/C#12 (LUM)
2–3/C#20
10–2/C#14
**REMOVE:**
**1–SIGN CABLE**

N

0 20 40
SCALE IN FEET

AMERICAN BLVD
(F.K.A. 80TH ST E)

ø1 & ø6 EVP
ø4 EVP
ø3 EVP
ø2 & ø5 EVP

HH 6 TO HH 11
INPLACE:
EXISTING CONDUIT
2–12/C#12
2–3/C#12
1–3/C#12 (LUM)
1–3/C#20
6–2/C#14
**REMOVE:**
**1–SIGN CABLE**

MA 4 TO HH 11
INPLACE:
EXISTING CONDUIT
2–12/C#12
2–3/C#12
1–3/C#12 (LUM)
1–3/C#20
**REMOVE:**
**1–SIGN CABLE**

ADD ALT. 1
S.P. 107–030–005

2013–201 WAY FINDING PROJECT

REVISE SIGNAL SYSTEM G
AMERICAN BLVD AND 34TH AVE S
INTERSECTION LAYOUT


CITY OF BLOOMINGTON MINNESOTA
1700 W 98TH ST.
BLOOMINGTON MN 55431
PHONE (952) 563-8700

ALLIANT ENGINEERING
233 Park Ave S, Ste 300
Minneapolis, MN 55415
612.758.3080 MAIN
612.758.3099 FAX
www.alliant-inc.com


REVISIONS

| DATE | DESCRIPTION | BY |
|---|---|---|
| | | |

I HEREBY CERTIFY THAT THIS PLAN WAS PREPARED BY ME OR UNDER MY DIRECT SUPERVISION AND THAT I AM A DULY LICENSED PROFESSIONAL ENGINEER UNDER THE LAWS OF THE STATE OF MINNESOTA.

THOMAS JENSEN — 44247 4/30/14
LIC. # DATE

DRAWN: KAS
CHECKED: TJJ
APPROVED: TJJ

SHEET:
69 OF 82

Drawing name: X:\2012\120092\PlanSheets\120092-sysG.dwg -- Printed: May 16, 2014 - 2:50pm

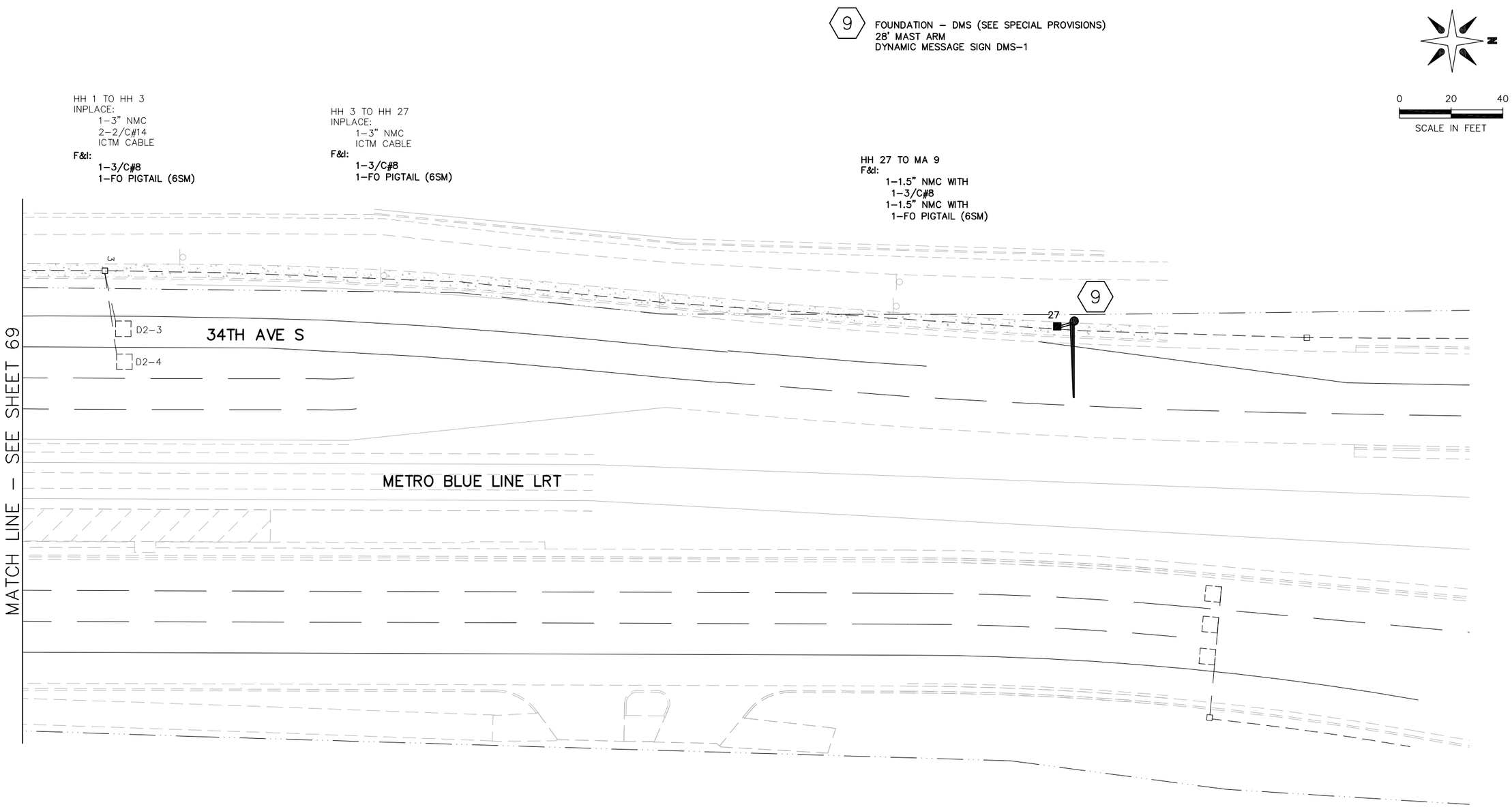


ADD ALT. 1
S.P. 107–030–005

2013–201 WAY FINDING PROJECT

REVISE SIGNAL SYSTEM G

AMERICAN BLVD AND 34TH AVE S

INTERSECTION LAYOUT MATCHLINES

CITY OF BLOOMINGTON MINNESOTA
1700 W 98TH ST.
BLOOMINGTON MN 55431
PHONE (952) 563-8700

ALLIANT ENGINEERING
233 Park Ave S, Ste 300
Minneapolis, MN 55415
612.758.3080 MAIN
612.758.3099 FAX
www.alliant-inc.com

REVISIONS

| DATE | DESCRIPTION | BY |
|---|---|---|
| | | |

I HEREBY CERTIFY THAT THIS PLAN WAS PREPARED BY ME OR UNDER MY DIRECT SUPERVISION AND THAT I AM A DULY LICENSED PROFESSIONAL ENGINEER UNDER THE LAWS OF THE STATE OF MINNESOTA.

THOMAS JENSEN 44247 4/30/14
LIC. # DATE

DRAWN: KAS
CHECKED: TJJ
APPROVED: TJJ

SHEET:
70 OF 82

Drawing name: X:\2012\120092\PlanSheets\120092-sysG.dwg -- Printed: May 16, 2014 - 2:50pm

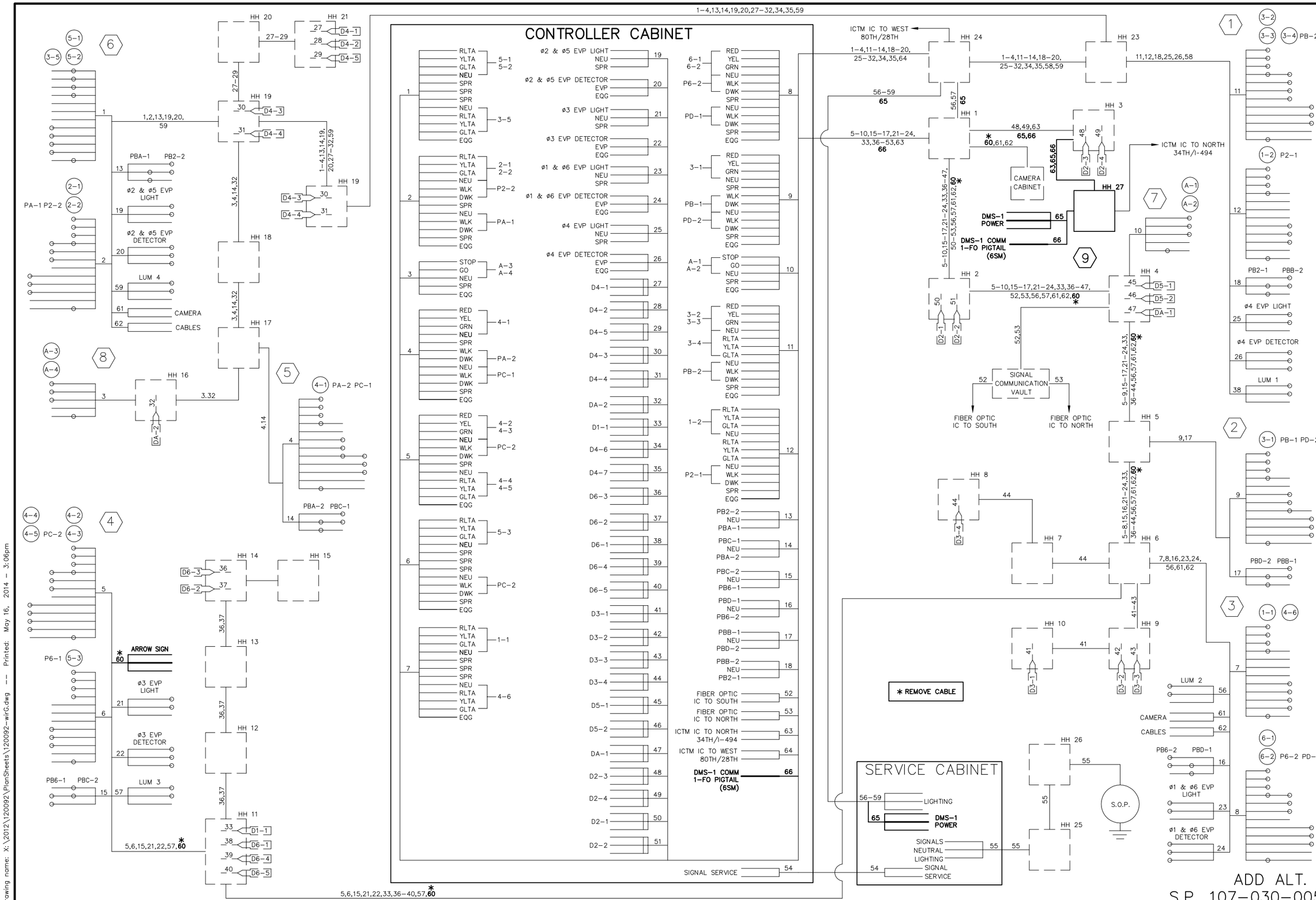


# 2013-201 WAY FINDING PROJECT

REVISE SIGNAL SYSTEM G

AMERICAN BLVD AND 34TH AVE S

WIRING DIAGRAM - SHEET 1 OF 1


CITY OF BLOOMINGTON MINNESOTA
1700 W 98TH ST. BLOOMINGTON MN 55431 PHONE (952) 563-8700

ALLIANT ENGINEERING
233 Park Ave S, Ste 300
Minneapolis, MN 55415
612.758.3080 MAIN
612.758.3099 FAX
www.alliant-inc.com


REVISIONS

| DATE | DESCRIPTION | BY |
|---|---|---|
| | | |

I HEREBY CERTIFY THAT THIS PLAN WAS PREPARED BY ME OR UNDER MY DIRECT SUPERVISION AND THAT I AM A DULY LICENSED PROFESSIONAL ENGINEER UNDER THE LAWS OF THE STATE OF MINNESOTA.

THOMAS JENSEN — LIC. # 44247 — DATE 4/30/14

DRAWN: KAS
CHECKED: TJJ
APPROVED: TJJ

SHEET: 71 OF 82

Drawing name: X:\2012\120092\PlanSheets\120092-wir6.dwg -- Printed: May 16, 2014 - 3:06pm

11 FOUNDATION – DMS (SEE SPECIAL PROVISIONS)
34' MAST ARM
DYNAMIC MESSAGE SIGN (DMS-9)

HH 11 TO HH MA-1
INPLACE:
3" RSC
3-12/C#12
2-3/C#12
2-3/C#12 (LUM)
1-3/C#20
1-2/C#12
1-VIDEO CABLE
F&I:
1-CCTV CABLE

HH I-21 10 TO HH I-22
INPLACE:
2" NMC
F&I:
1-3/C#8
1-FO PIGTAIL (6SM)

HH I-22 10 TO HH I-23
INPLACE:
2" NMC
F&I:
1-3/C#8
1-FO PIGTAIL (6SM)

MA-11 TO HH 12
EXTEND:
1-1.5" NMC WITH
1-3/C#8
1-1.5" NMC WITH
1-FO PIGTAIL (6SM)

HH 1-23 TO HH 12
F&I:
1-1.5" NMC WITH
1-3/C#8
1-1.5" NMC WITH
1-FO PIGTAIL (6SM)

1 INPLACE:
FIELD VERIFY
F&I: 1-CCTV HARDWARE
EXTEND INTO HH 11:
3" RSC
3-12/C#12
2-3/C#12
2-3/C#12 (LUM)
1-3/C#20
1-2/C#12
1-VIDEO CABLE
F&I: 1-CCTV CABLE

CAC 1 TO HH I-21
F&I:
2" NMC
1-3/C#8

HH 2 TO HH 11
INPLACE:
2-4" RSC
7-12/C#12
3-3/C#12
2-3/C#12 (LUM)
2-3/C#20
3-2/C#12
2-VIDEO CABLE
F&I:
1-CCTV CABLE

CAC 1 TO HH 2
INPLACE:
2-4" RSC
7-12/C#12
4-3/C#12
2-3/C#20
3-2/C#12
2-VIDEO CABLE
F&I:
1-CCTV CABLE

SP 1 TO HH 2
INPLACE:
2" RSC
4-3/C#12 (LUM)
F&I:
1-3/C#8

SP 1 TO HH I-21
F&I:
2" NMC
1-3/C#8

SCALE IN FEET
0 20 40

LINDAU LN

24TH AVE S (CSAH 1)

F&I 1-CCTV HARDWARE ON TOP OF EXISTING LUMINAIRE

CCTV-8

ø1 & ø6 EVP
ø3 & ø8 EVP
ø2 & ø5 EVP
ø4 & ø7 EVP

ADD ALT. 1
S.P. 107-030-005

2013-201 WAY FINDING PROJECT

REVISE SIGNAL SYSTEM H
LINDAU LN AND 24TH AVE S
INTERSECTION LAYOUT


CITY OF BLOOMINGTON MINNESOTA
1700 W 98TH ST.
BLOOMINGTON MN 55431
PHONE (952) 563-8700

ALLIANT ENGINEERING
233 Park Ave S, Ste 300
Minneapolis, MN 55415
612.758.3080 MAIN
612.758.3099 FAX
www.alliant-inc.com


REVISIONS

| DATE | DESCRIPTION | BY |
|---|---|---|

I HEREBY CERTIFY THAT THIS PLAN WAS PREPARED BY ME OR UNDER MY DIRECT SUPERVISION AND THAT I AM A DULY LICENSED PROFESSIONAL ENGINEER UNDER THE LAWS OF THE STATE OF MINNESOTA.

THOMAS JENSEN 44247 4/30/14
LIC. # DATE

DRAWN: KAS
CHECKED: TJJ
APPROVED: TJJ

SHEET:
72 OF 82

Drawing name: X:\2012\120092\PlanSheets\120092-sysH.dwg -- Printed: May 16, 2014 - 11:05am

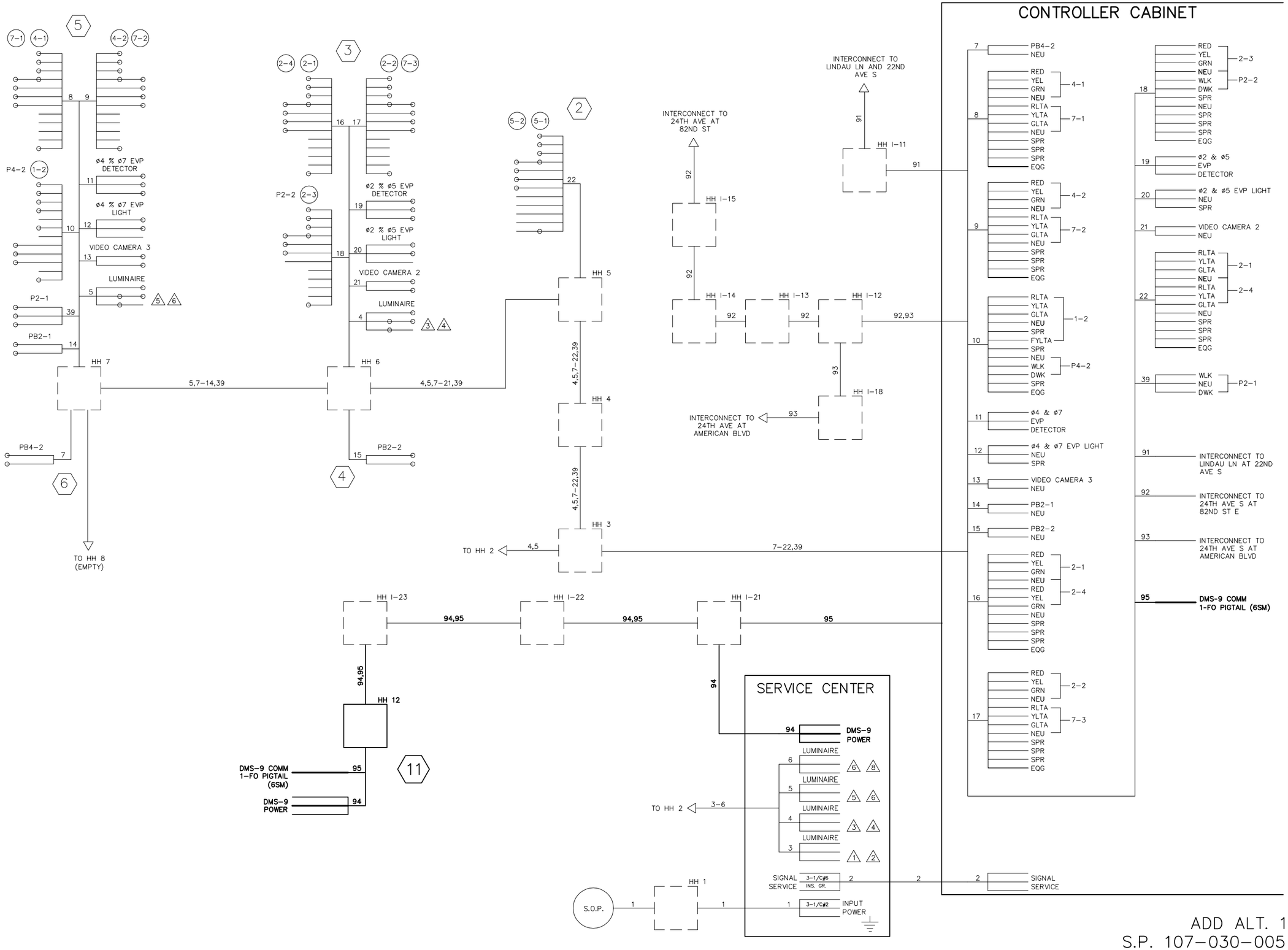


ADD ALT. 1
S.P. 107-030-005

# 2013-201 WAY FINDING PROJECT

## REVISE SIGNAL SYSTEM H

LINDAU LN AND 24TH AVE S

WIRING DIAGRAM - SHEET 1 OF 2


CITY OF BLOOMINGTON MINNESOTA
1700 W 98TH ST. BLOOMINGTON MN 55431 PHONE (952) 563-8700

ALLIANT ENGINEERING
233 Park Ave S, Ste 300
Minneapolis, MN 55415
612.758.3080 MAIN
612.758.3099 FAX
www.alliant-inc.com


REVISIONS

| DATE | DESCRIPTION | BY |
|---|---|---|
| | | |

I HEREBY CERTIFY THAT THIS PLAN WAS PREPARED BY ME OR UNDER MY DIRECT SUPERVISION AND THAT I AM A DULY LICENSED PROFESSIONAL ENGINEER UNDER THE LAWS OF THE STATE OF MINNESOTA.

THOMAS JENSEN — LIC. # 44247 — DATE 4/30/14

DRAWN: KAS
CHECKED: TJJ
APPROVED: TJJ

SHEET: 73 OF 82

Drawing name: X:\2012\120092\PlanSheets\120092-wirH.dwg -- Printed: May 16, 2014 - 3:07pm

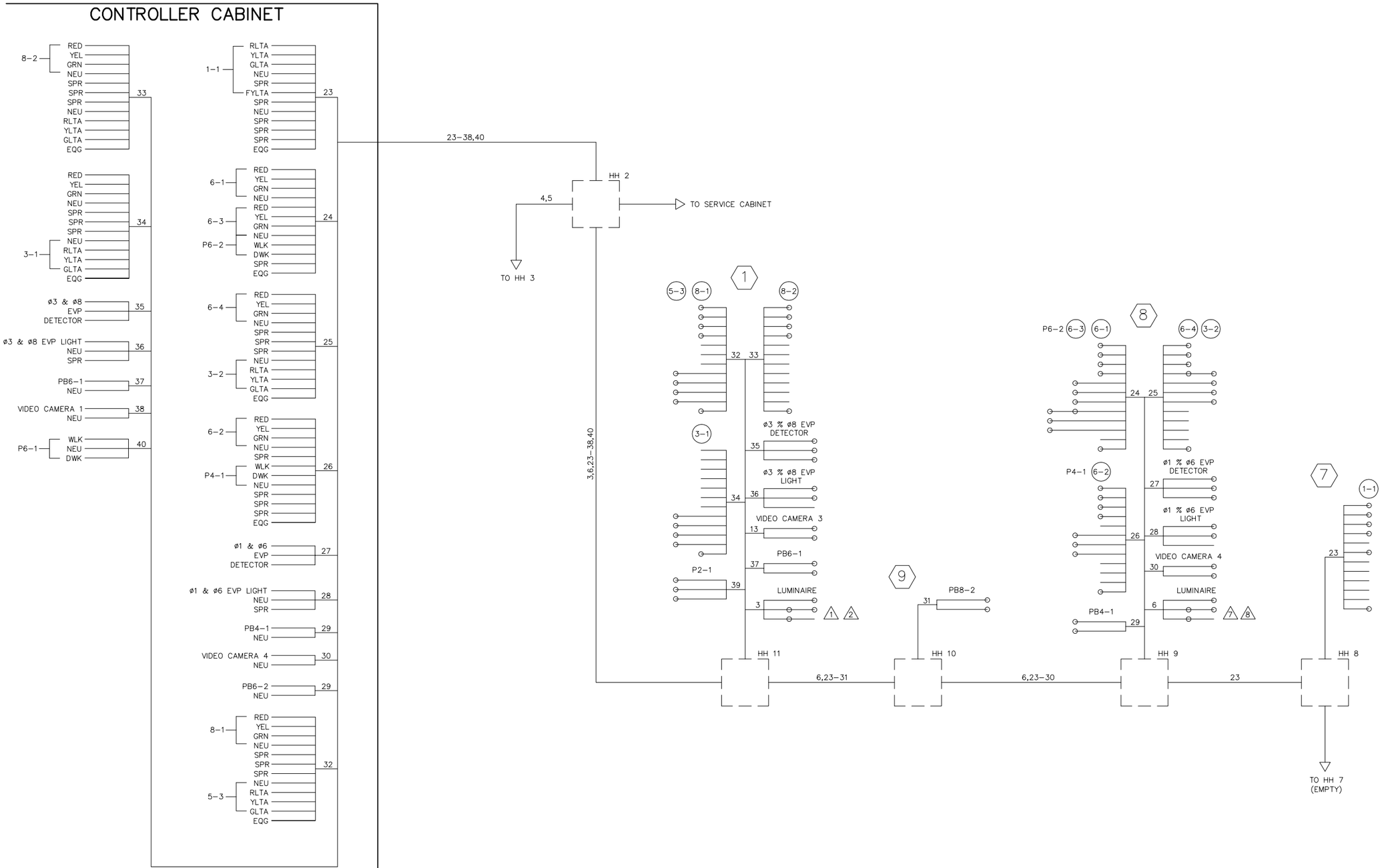


ADD ALT. 1
S.P. 107-030-005

2013-201 WAY FINDING PROJECT

REVISE SIGNAL SYSTEM H

LINDAU LN AND 24TH AVE S

WIRING DIAGRAM - SHEET 2 OF 2


CITY OF BLOOMINGTON MINNESOTA
1700 W 98TH ST.
BLOOMINGTON MN 55431
PHONE (952) 563-8700

ALLIANT ENGINEERING
233 Park Ave S, Ste 300
Minneapolis, MN 55415
612.758.3080 MAIN
612.758.3099 FAX
www.alliant-inc.com


REVISIONS

| DATE | DESCRIPTION | BY |
|---|---|---|
| | | |

I HEREBY CERTIFY THAT THIS PLAN WAS PREPARED BY ME OR UNDER MY DIRECT SUPERVISION AND THAT I AM A DULY LICENSED PROFESSIONAL ENGINEER UNDER THE LAWS OF THE STATE OF MINNESOTA.

THOMAS JENSEN LIC. # 44247 DATE 4/30/14

DRAWN: KAS
CHECKED: TJJ
APPROVED: TJJ

SHEET: 74 OF 82

Drawing name: X:\2012\120092\PlanSheets\120092-wirH.dwg -- Printed: May 16, 2014 - 3:07pm

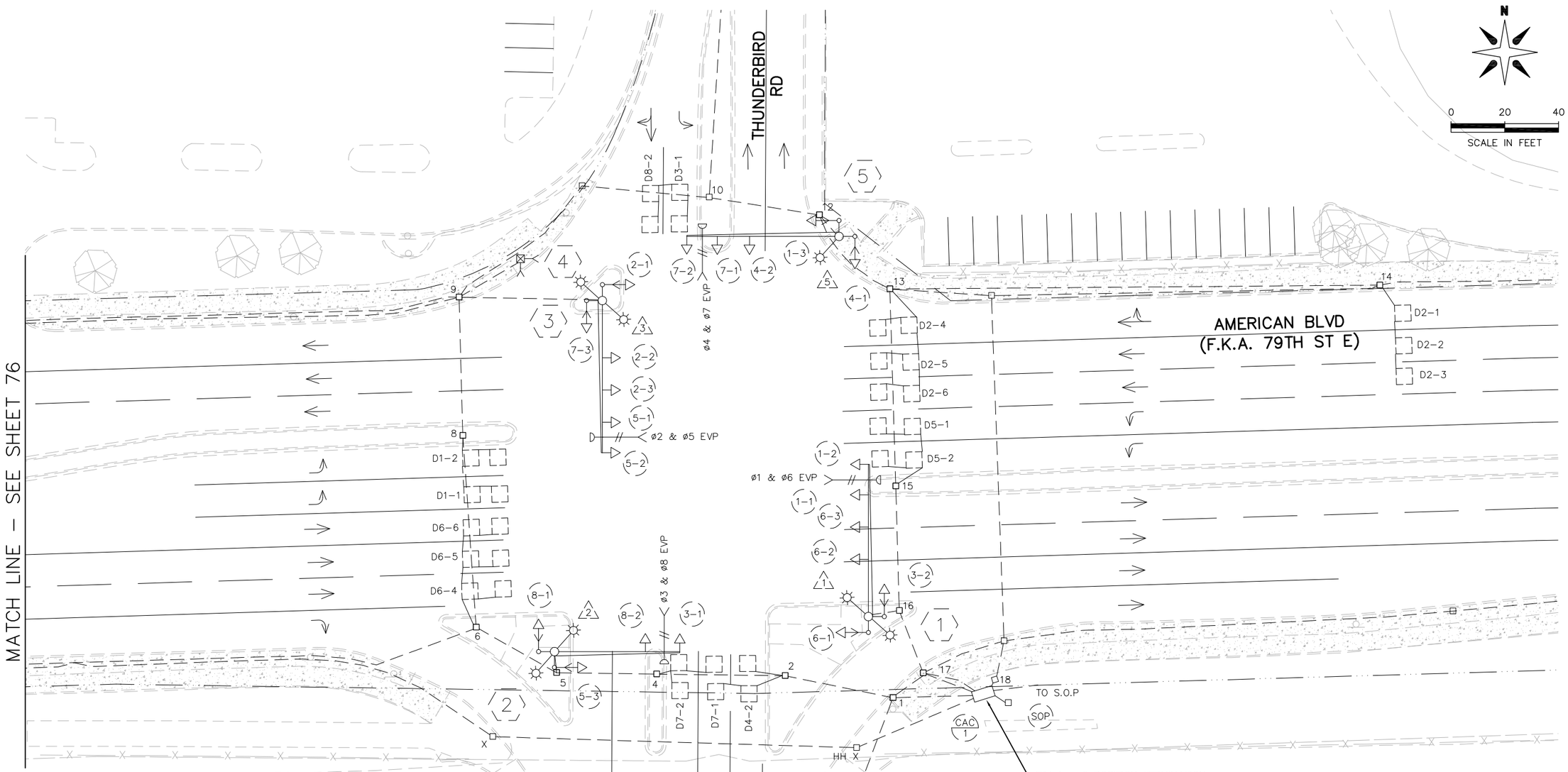


HH 6 TO HH 7
INPLACE:
2" RSC
3-2/C#14
**F&I:**
**1-3/C#8**
**1-FO PIGTAIL (6SM)**

HH 5 TO HH 6
INPLACE:
4" RSC
3-12/C#12
2-3/C#12
1-3/C#12 (LUM)
1-3/C#20
8-2/C#14
1-6PR#19 (VMS)
**F&I:**
**1-3/C#8**
**1-FO PIGTAIL (6SM)**

HH 4 TO HH 5
INPLACE:
4" RSC
5-12/C#12
5-3/C#12
2-3/C#12 (LUM)
2-3/C#20
8-2/C#14
1-6PR#19 (VMS)
**F&I:**
**1-3/C#8**
**1-FO PIGTAIL (6SM)**

HH 2 TO HH 4
INPLACE:
4" RSC
5-12/C#12
5-3/C#12
2-3/C#12 (LUM)
2-3/C#20
10-2/C#14
1-6PR#19 (VMS)
**F&I:**
**1-3/C#8**
**1-FO PIGTAIL (6SM)**

HH 1 TO HH 2
INPLACE:
2-5" RSC
5-12/C#12
5-3/C#12
2-3/C#12 (LUM)
2-3/C#20
12-2/C#14
1-6PR#19 (VMS)
**F&I:**
**1-3/C#8**
**1-FO PIGTAIL (6SM)**

CAC 1 TO HH 1
INPLACE:
2-5" RSC
5-12/C#12
5-3/C#12
2-3/C#20
12-2/C#14
1-6PR#19 (VMS)
**F&I:**
**1-FO PIGTAIL (6SM)**

SP 1 TO HH 17
INPLACE:
1-2" RSC
4-3/C#12 (LUM)
**F&I:**
**1-3/C#8**

HH 17 TO HH 1
INPLACE:
1-2" RSC
2-3/C#12 (LUM)
**F&I:**
**1-3/C#8**

ADD ALT. 2
S.P. 107-030-005

2013-201 WAY FINDING PROJECT

REVISE SIGNAL SYSTEM I
AMERICAN BLVD AND THUNDERBIRD RD
INTERSECTION LAYOUT


CITY OF BLOOMINGTON MINNESOTA
1700 W 98TH ST.
BLOOMINGTON MN 55431
PHONE (952) 563-8700

ALLIANT ENGINEERING
233 Park Ave S, Ste 300
Minneapolis, MN 55415
612.758.3080 MAIN
612.758.3099 FAX
www.alliant-inc.com


REVISIONS

| DATE | DESCRIPTION | BY |
|---|---|---|
| | | |

I HEREBY CERTIFY THAT THIS PLAN WAS PREPARED BY ME OR UNDER MY DIRECT SUPERVISION AND THAT I AM A DULY LICENSED PROFESSIONAL ENGINEER UNDER THE LAWS OF THE STATE OF MINNESOTA.

THOMAS JENSEN 44247 4/30/14
LIC. # DATE

DRAWN: KAS
CHECKED: TJJ
APPROVED: TJJ

SHEET:
75 OF 82

Drawing name: X:\2012\120092\PlanSheets\120092-sysi.dwg -- Printed: May 16, 2014 - 2:53pm

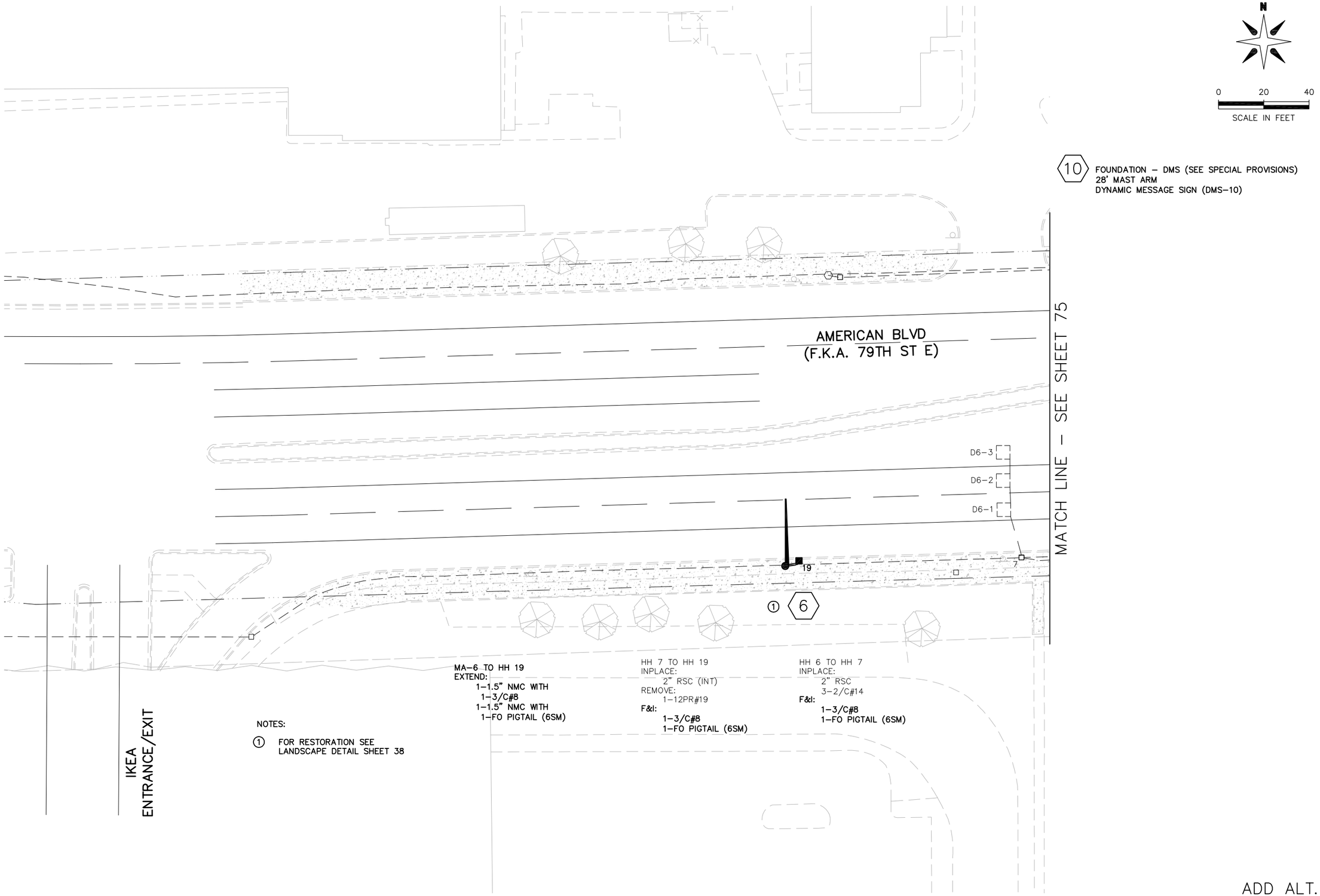


NOTES:

1. FOR RESTORATION SEE LANDSCAPE DETAIL SHEET 38

ADD ALT. 2
S.P. 107–030–005

2013–201 WAY FINDING PROJECT

REVISE SIGNAL SYSTEM I
AMERICAN BLVD AND THUNDERBIRD RD
INTERSECTION LAYOUT MATCHLINES

CITY OF BLOOMINGTON MINNESOTA
1700 W 98TH ST.
BLOOMINGTON MN 55431
PHONE (952) 563-8700

ALLIANT ENGINEERING, INC.
233 PARK AVE. SOUTH, SUITE 300
MINNEAPOLIS, MN 55415
PHONE (612) 758-3080
FAX (612) 758-3099

REVISIONS

| DATE | DESCRIPTION | BY |
|---|---|---|
| | | |

I HEREBY CERTIFY THAT THIS PLAN WAS PREPARED BY ME OR UNDER MY DIRECT SUPERVISION AND THAT I AM A DULY LICENSED PROFESSIONAL ENGINEER UNDER THE LAWS OF THE STATE OF MINNESOTA.

THOMAS JENSEN 44247 4/30/14
LIC. # DATE

DRAWN: KAS
CHECKED: TJJ
APPROVED: TJJ

SHEET:
76 OF 82

Drawing name: X:\2012\120092\PlanSheets\120092-sysI.dwg -- Printed: May 16, 2014 - 2:56pm

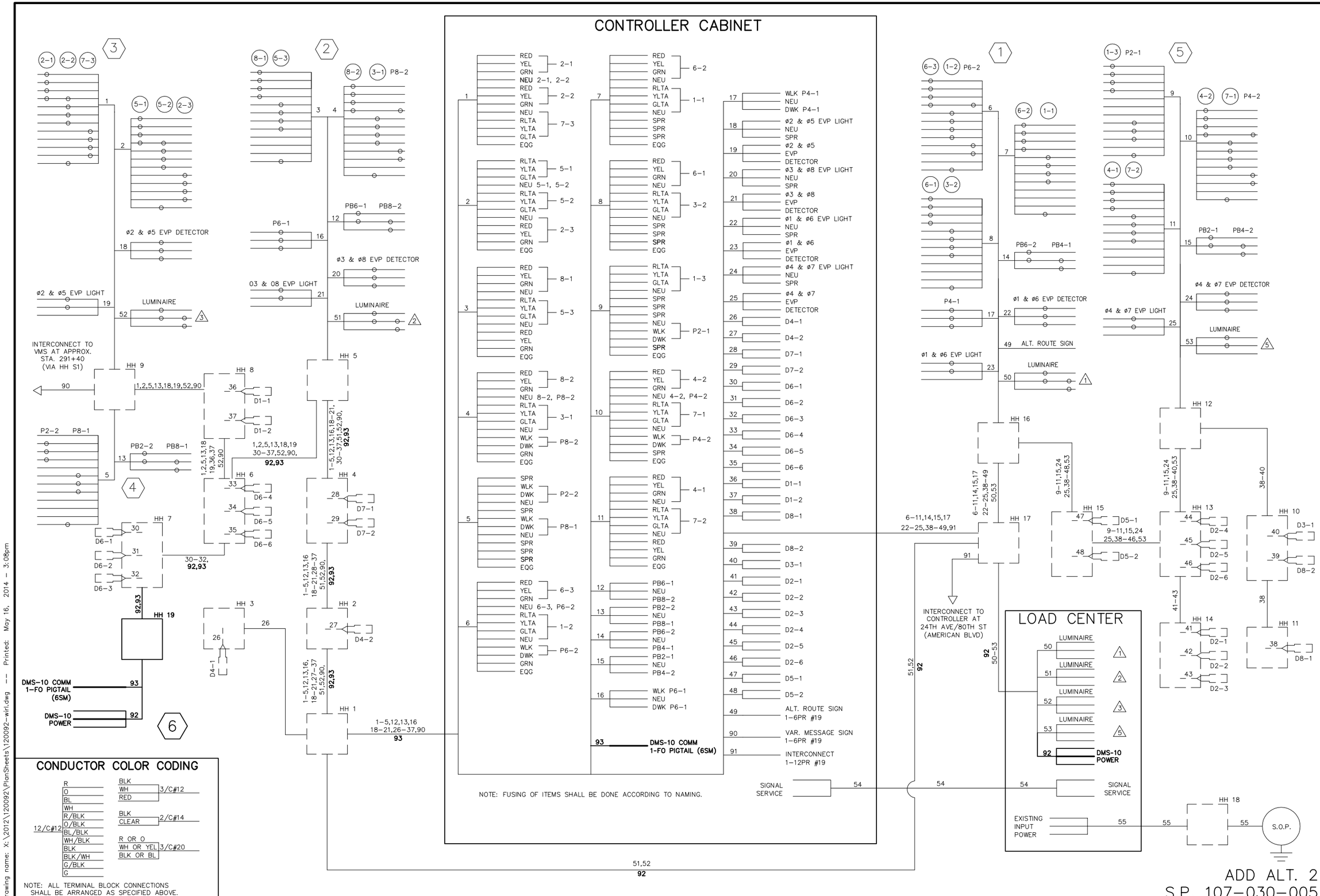


# 2013-201 WAY FINDING PROJECT

## REVISE SIGNAL SYSTEM I

AMERICAN BLVD AND THUNDERBIRD RD

WIRING DIAGRAM – SHEET 1 OF 1


CITY OF BLOOMINGTON MINNESOTA
1700 W 98TH ST. BLOOMINGTON MN 55431 PHONE (952) 563-8700

ALLIANT ENGINEERING
233 Park Ave S, Ste 300
Minneapolis, MN 55415
612.758.3080 MAIN
612.758.3099 FAX
www.alliant-inc.com


REVISIONS

| DATE | DESCRIPTION | BY |
|---|---|---|

I HEREBY CERTIFY THAT THIS PLAN WAS PREPARED BY ME OR UNDER MY DIRECT SUPERVISION AND THAT I AM A DULY LICENSED PROFESSIONAL ENGINEER UNDER THE LAWS OF THE STATE OF MINNESOTA.

THOMAS JENSEN 44247 4/30/14
LIC. # DATE

DRAWN: KAS
CHECKED: TJJ
APPROVED: TJJ

SHEET: 77 OF 82

Drawing name: X:\2012\120092\PlanSheets\120092-wiri.dwg -- Printed: May 16, 2014 - 3:08pm

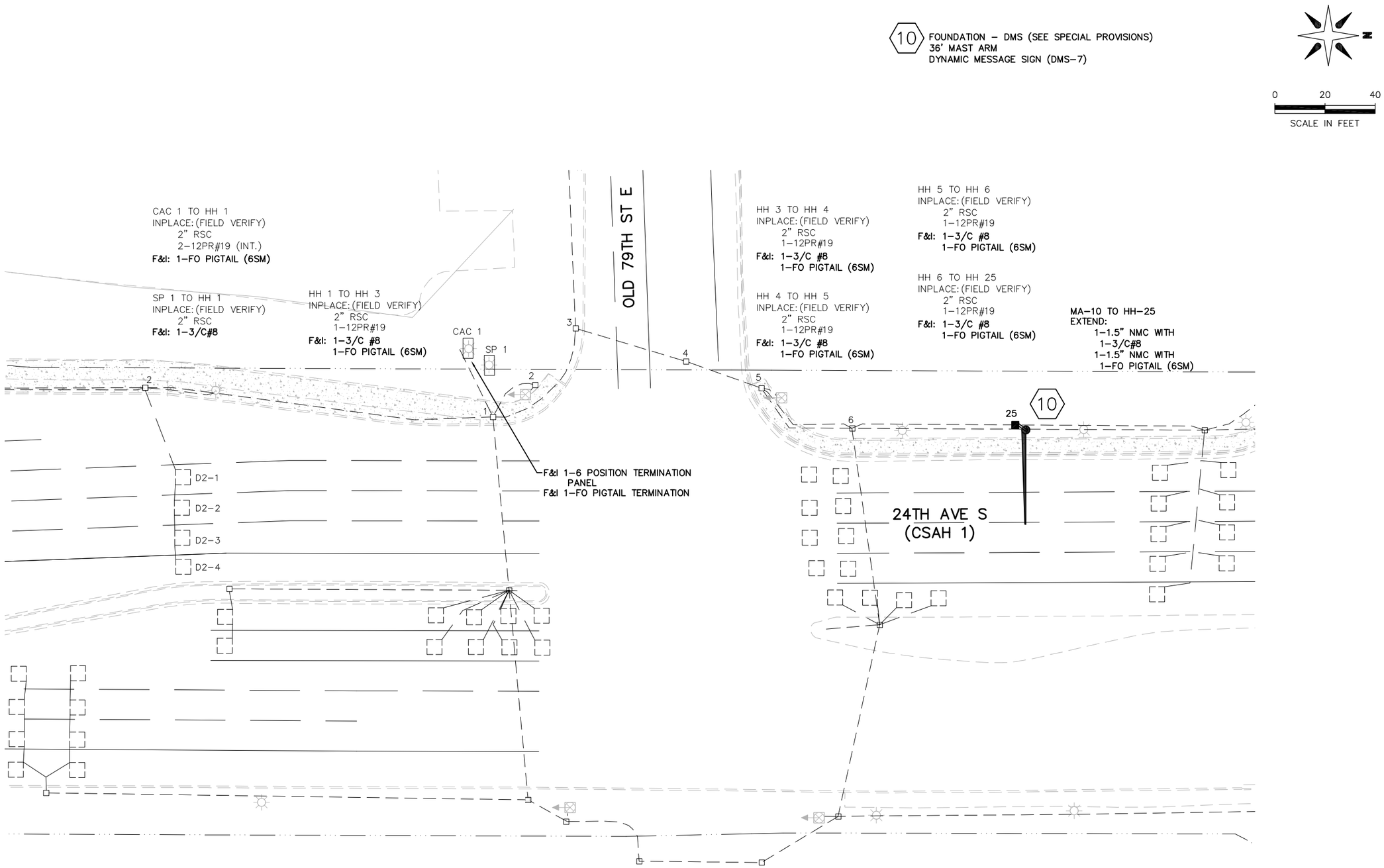


ADD ALT. 2
S.P. 107–030–005

2013–201 WAY FINDING PROJECT

REVISE SIGNAL SYSTEM J
78TH ST AT 24TH AVE S
INTERSECTION LAYOUT

CITY OF BLOOMINGTON MINNESOTA
1700 W 98TH ST.
BLOOMINGTON MN 55431
PHONE (952) 563-8700

ALLIANT ENGINEERING
233 Park Ave S, Ste 300
Minneapolis, MN 55415
612.758.3080 MAIN
612.758.3099 FAX
www.alliant-inc.com

REVISIONS

| DATE | DESCRIPTION | BY |
|---|---|---|
| | | |

I HEREBY CERTIFY THAT THIS PLAN WAS PREPARED BY ME OR UNDER MY DIRECT SUPERVISION AND THAT I AM A DULY LICENSED PROFESSIONAL ENGINEER UNDER THE LAWS OF THE STATE OF MINNESOTA.

THOMAS JENSEN 44247 4/30/14
LIC. # DATE

DRAWN: KAS
CHECKED: TJJ
APPROVED: TJJ

SHEET:
78 OF 82

Drawing name: X:\2012\120092\PlanSheets\120092-sysJ.dwg -- Printed: May 16, 2014 - 11:11am

# THE SHEET INTENTIONALLY LEFT BLANK

ADD ALT. 2
S.P. 107-030-005

2013-201 WAY FINDING PROJECT

REVISE SIGNAL SYSTEM J
AMERICAN BLVD AND 24TH AVE S (CSAH 1)
WIRING DIAGRAM - SHEET 1 OF 2

CITY OF BLOOMINGTON MINNESOTA
1700 W 98TH ST.
BLOOMINGTON MN 55431
PHONE (952) 563-8700

ALLIANT ENGINEERING
233 Park Ave S, Ste 300
Minneapolis, MN 55415
612.758.3080 MAIN
612.758.3099 FAX
www.alliant-inc.com

REVISIONS

| DATE | DESCRIPTION | BY |
|---|---|---|
| | | |

I HEREBY CERTIFY THAT THIS PLAN WAS PREPARED BY ME OR UNDER MY DIRECT SUPERVISION AND THAT I AM A DULY LICENSED PROFESSIONAL ENGINEER UNDER THE LAWS OF THE STATE OF MINNESOTA.

THOMAS JENSEN 44247 4/30/14
LIC. # DATE

DRAWN: KAS
CHECKED: TJJ
APPROVED: TJJ

SHEET:
79 OF 82

Drawing name: X:\2012\120092\PlanSheets\120092-wirJ.dwg -- Printed: May 16, 2014 - 3:09pm

8 FOUNDATION – DMS (SEE SPECIAL PROVSIONS)
32' MAST ARM
DYNAMIC MESSAGE SIGN (DMS–15)

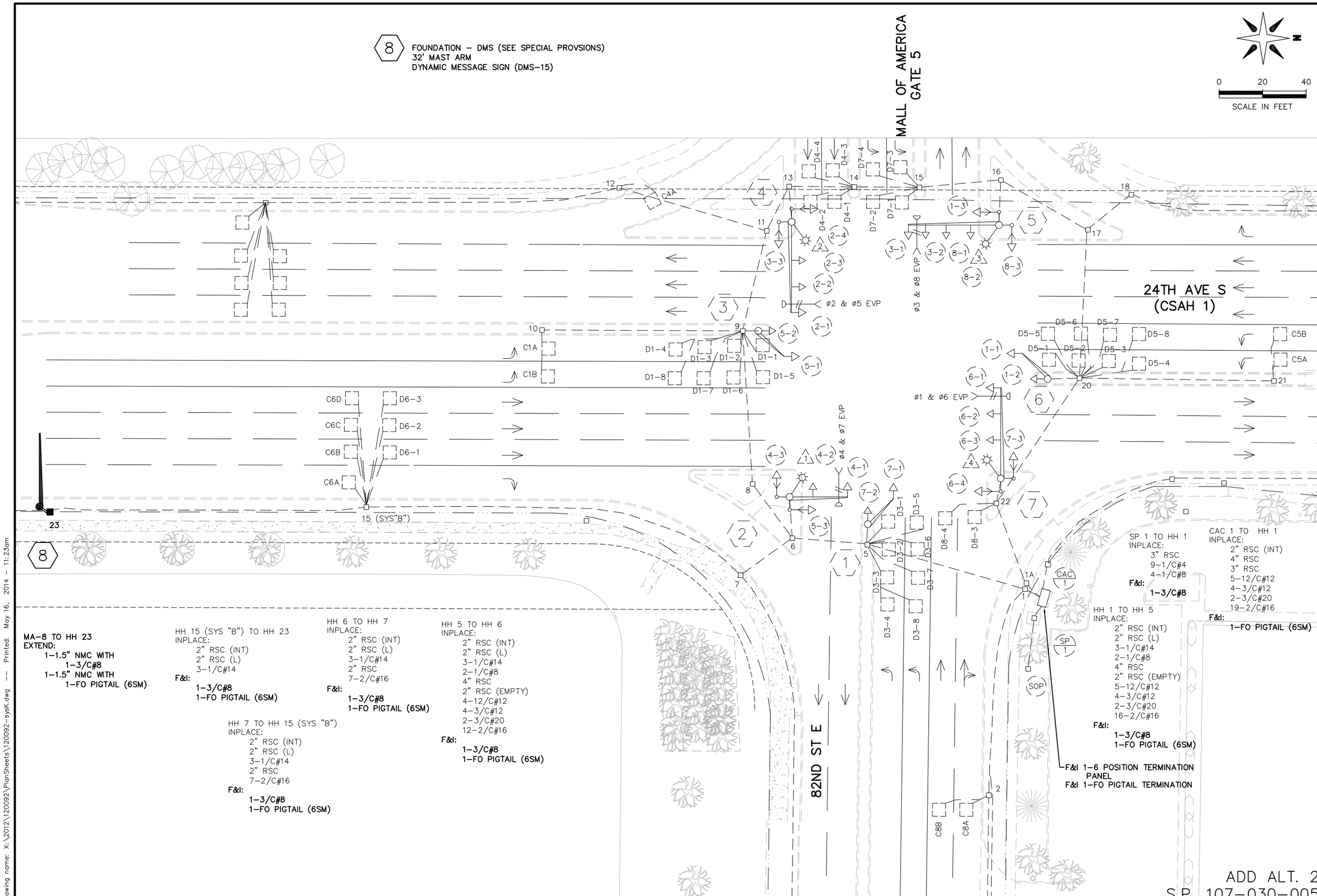


ADD ALT. 2
S.P. 107–030–005

# 2013–201 WAY FINDING PROJECT

## REVISE SIGNAL SYSTEM K

82ND ST E AND 24TH AVE S (CSAH 1)
INTERSECTION LAYOUT


CITY OF BLOOMINGTON MINNESOTA
1700 W 98TH ST.
BLOOMINGTON MN 55431
PHONE (952) 563-8700

ALLIANT ENGINEERING
233 Park Ave S, Ste 300
Minneapolis, MN 55415
612.758.3080 MAIN
612.758.3099 FAX
www.alliant–inc.com


REVISIONS

| DATE | DESCRIPTION | BY |
|---|---|---|
| | | |

I HEREBY CERTIFY THAT THIS PLAN WAS PREPARED BY ME OR UNDER MY DIRECT SUPERVISION AND THAT I AM A DULY LICENSED PROFESSIONAL ENGINEER UNDER THE LAWS OF THE STATE OF MINNESOTA.

THOMAS JENSEN 44247 4/30/14
LIC. # DATE

DRAWN: KAS
CHECKED: TJJ
APPROVED: TJJ

SHEET:
80 OF 82

Drawing name: X:\2012\120092\PlanSheets\120092–sysK.dwg — Printed: May 16, 2014 – 11:23am

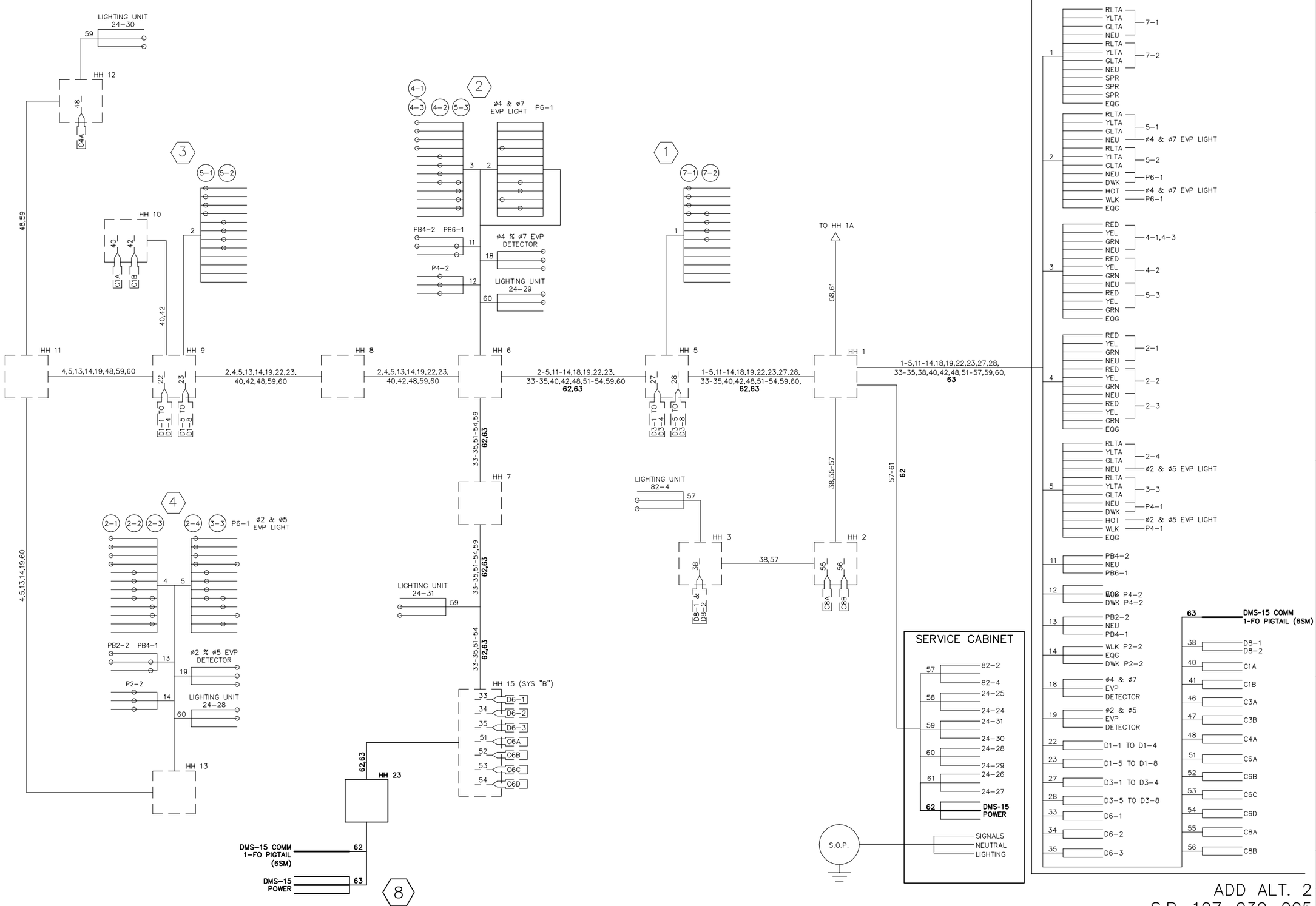


ADD ALT. 2
S.P. 107-030-005

# 2013-201 WAY FINDING PROJECT

## REVISE SIGNAL SYSTEM K

24TH AVE S (CSAH 1) AND 82ND ST E

WIRING DIAGRAM - SHEET 1 OF 2


CITY OF BLOOMINGTON MINNESOTA
1700 W 98TH ST.
BLOOMINGTON MN 55431
PHONE (952) 563-8700

ALLIANT ENGINEERING
233 Park Ave S, Ste 300
Minneapolis, MN 55415
612.758.3080 MAIN
612.758.3099 FAX
www.alliant-inc.com


REVISIONS

| DATE | DESCRIPTION | BY |
|---|---|---|
| | | |

I HEREBY CERTIFY THAT THIS PLAN WAS PREPARED BY ME OR UNDER MY DIRECT SUPERVISION AND THAT I AM A DULY LICENSED PROFESSIONAL ENGINEER UNDER THE LAWS OF THE STATE OF MINNESOTA.

THOMAS JENSEN 44247 4/30/14
LIC. # DATE

DRAWN: KAS
CHECKED: TJJ
APPROVED: TJJ

SHEET: 81 OF 82

Drawing name: X:\2012\120092\PlanSheets\120092-wirk.dwg -- Printed: May 16, 2014 - 3:10pm

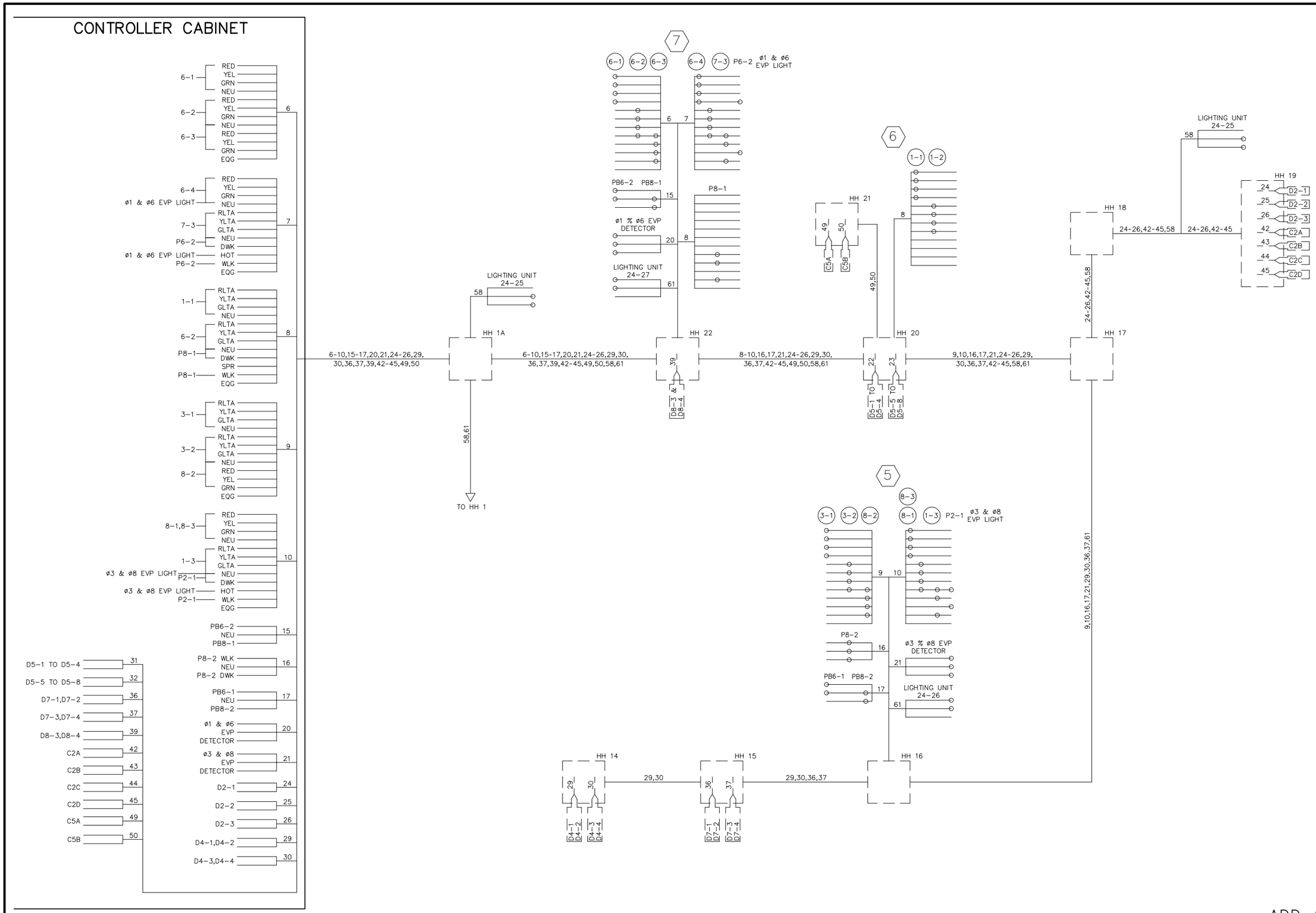


ADD ALT. 2
S.P. 107-030-005

2013-201 WAY FINDING PROJECT

REVISE SIGNAL SYSTEM K

24TH AVE S (CSAH 1) AND 82ND ST E

WIRING DIAGRAM - SHEET 2 OF 2

CITY OF BLOOMINGTON MINNESOTA
1700 W 98TH ST.
BLOOMINGTON MN 55431
PHONE (952) 563-8700

ALLIANT ENGINEERING
233 Park Ave S, Ste 300
Minneapolis, MN 55415
612.758.3080 MAIN
612.758.3099 FAX
www.alliant-inc.com

REVISIONS

| DATE | DESCRIPTION | BY |
|---|---|---|

I HEREBY CERTIFY THAT THIS PLAN WAS PREPARED BY ME OR UNDER MY DIRECT SUPERVISION AND THAT I AM A DULY LICENSED PROFESSIONAL ENGINEER UNDER THE LAWS OF THE STATE OF MINNESOTA.

THOMAS JENSEN 44247 4/30/14
LIC. # DATE

DRAWN: KAS
CHECKED: TJJ
APPROVED: TJJ

SHEET:
82 OF 82

Drawing name: X:\2012\120092\PlanSheets\120092-wirK.dwg -- Printed: May 16, 2014 - 3:10pm